DRAWING

EDMS REF: X	VERSION: X	PCB: X	SYSTEM: X
REF:	TITLE: DIGITAL INPUT MODULE		
DIV. 1211 GENEVA 23 SWITZERLAND	ABBREV: DIM		PAGE:
	LAST_MODIFIED=Sun Dec 9 20:18:30 2001		
	DESSIN: STRINDEL EF	ETUDE: G. OLESEN	DATE: 03/12/01

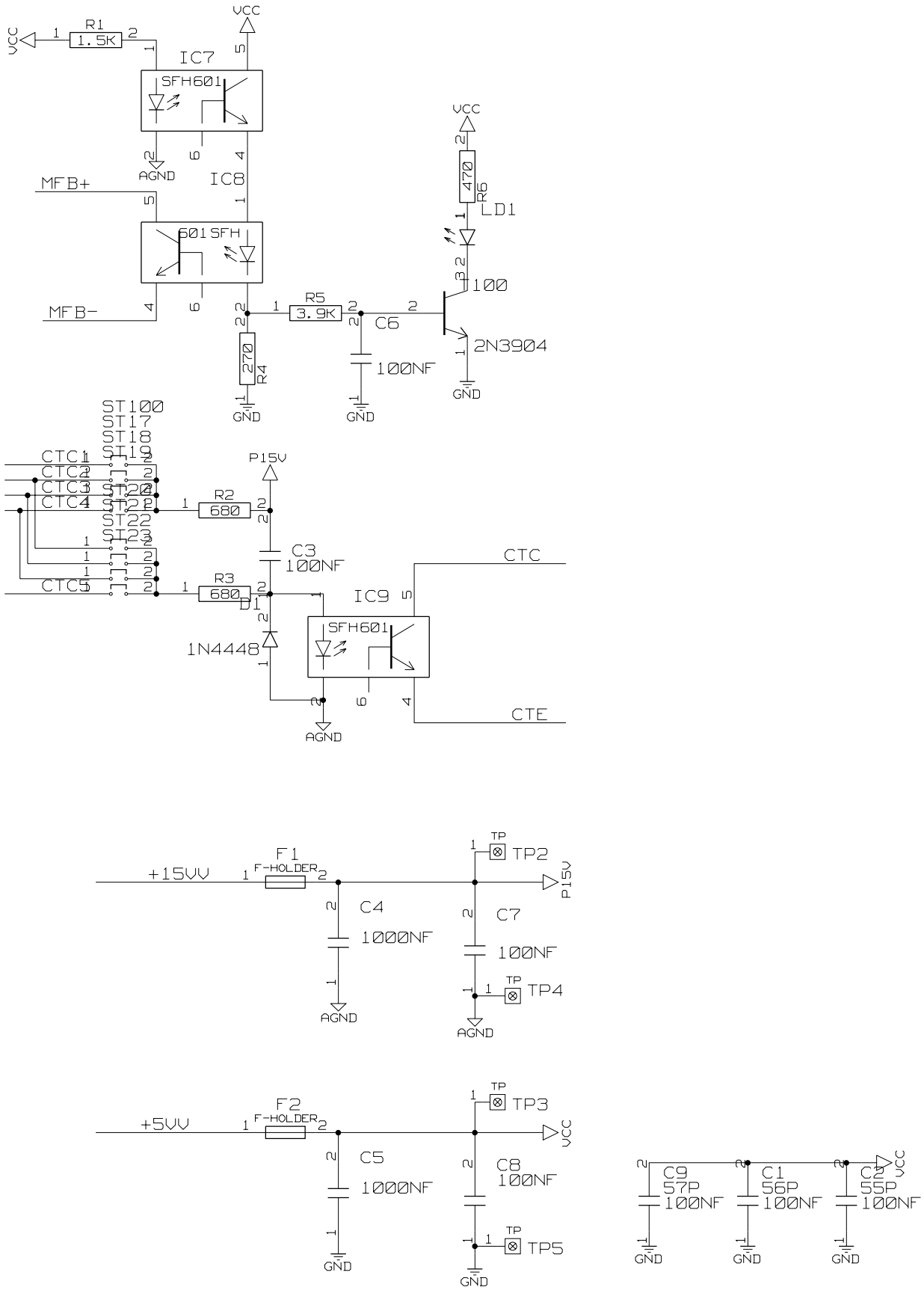

EDMS REF: X	VERSION: X	PCB: X	SYSTEM: X

REF:

TITLE:

ABBREV:

PAGE:

DESSIN:

ETUDE:

DATE:

CERN
IT/CE
DIV.
1211 GENEVA 23
SWITZERLAND

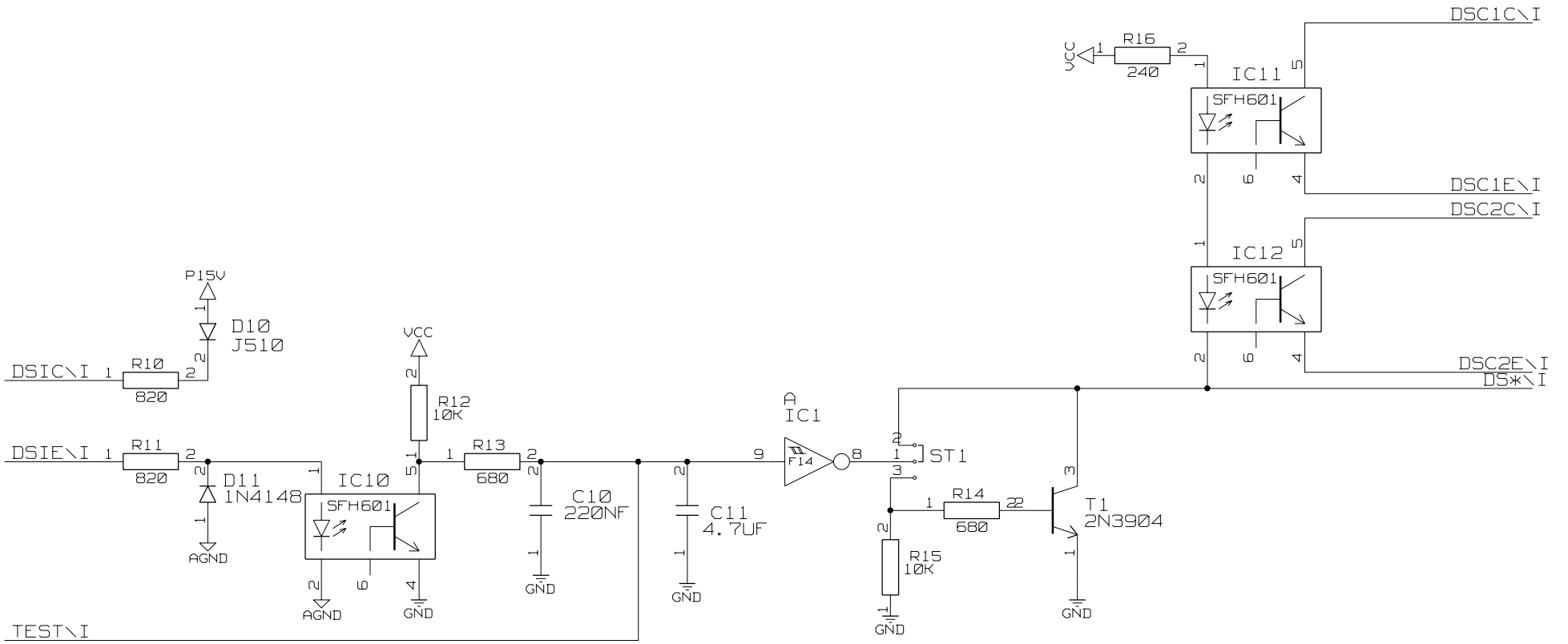

DRAWING

EDMS REF: X	VERSION: X	PCB: X	SYSTEM: X
REF:	TITLE: DIGITAL INPUT MODULE		
CERN IT/CE DIV. 1211 GENEVA 23 SWITZERLAND	ABBREV: DIM		PAGE:
	LAST_MODIFIED=Sun Dec 9 20:18:32 2001		
	DESSIN: STRINDEL EF	ETUDE: G. OLESEN	DATE: 30/11/01

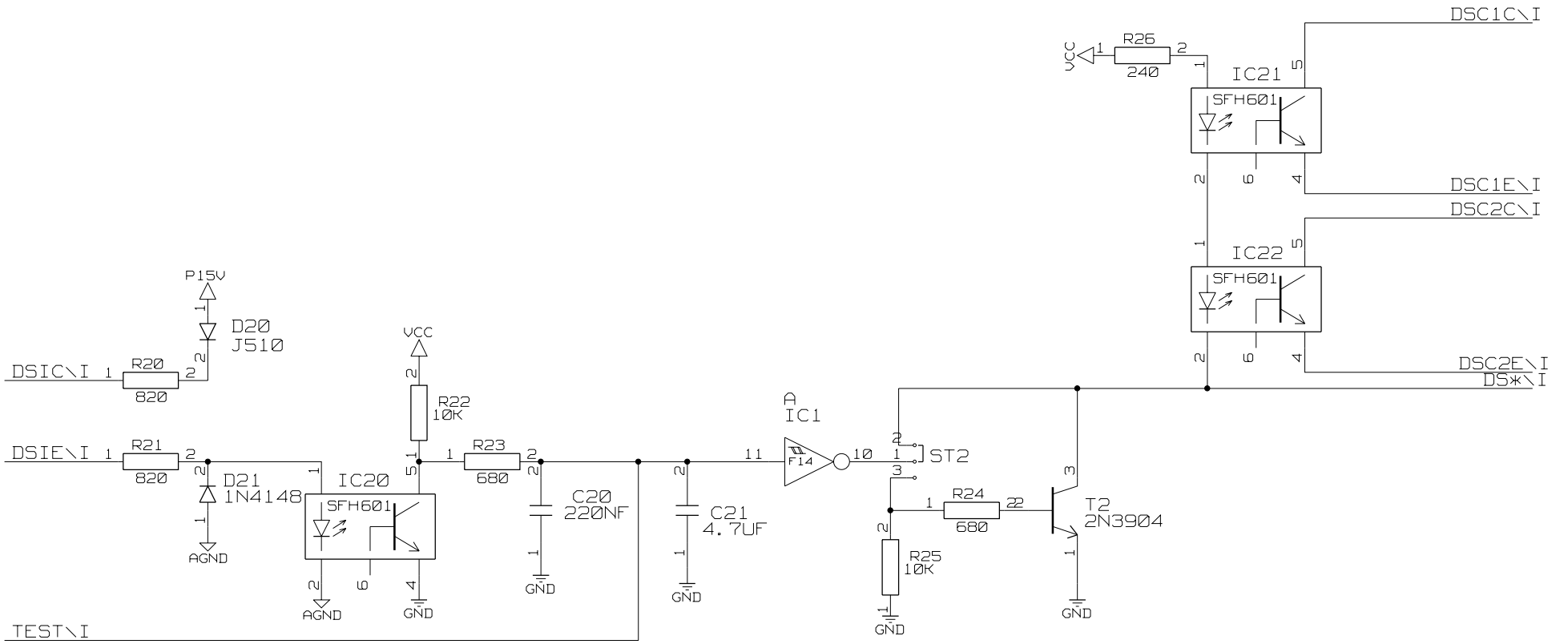

DRAWING

EDMS REF: X	VERSION: X	PCB: X	SYSTEM: X
REF:	TITLE: DIGITAL INPUT MODULE		
CERN IT/CE DIV. 1211 GENEVA 23 SWITZERLAND	ABBREV: DIM		PAGE:
	LAST_MODIFIED=Sun Dec 9 20:18:32 2001		
	DESSIN: STRINDEL EF	ETUDE: G. OLESEN	DATE: 30/11/01

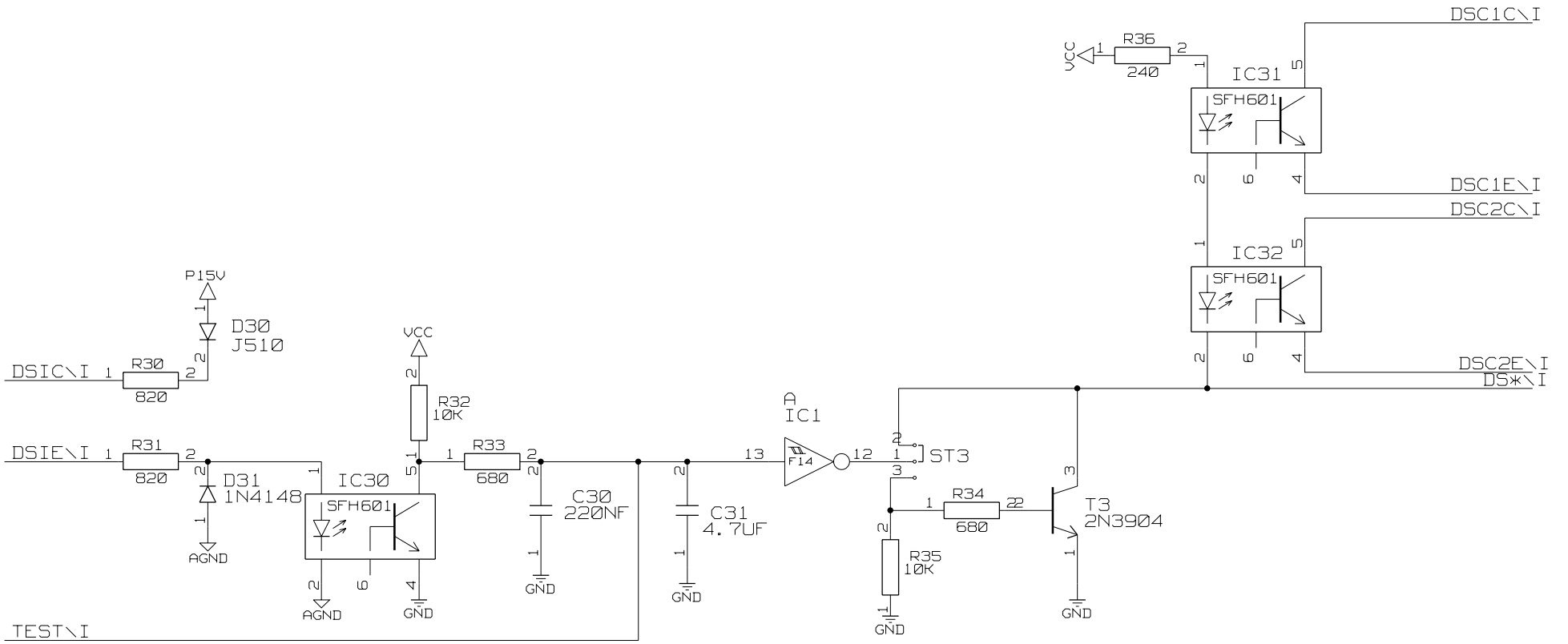

DRAWING

EDMS REF: X	VERSION: X	PCB: X	SYSTEM: X
REF:	TITLE: DIGITAL INPUT MODULE		
CERN IT/CE DIV. 1211 GENEVA 23 SWITZERLAND	ABBREV: DIM		PAGE:
	LAST_MODIFIED=Sun Dec 9 20:18:36 2001		
	DESSIN: STRINDEL EF	ETUDE: G. OLESEN	DATE: 30/11/01

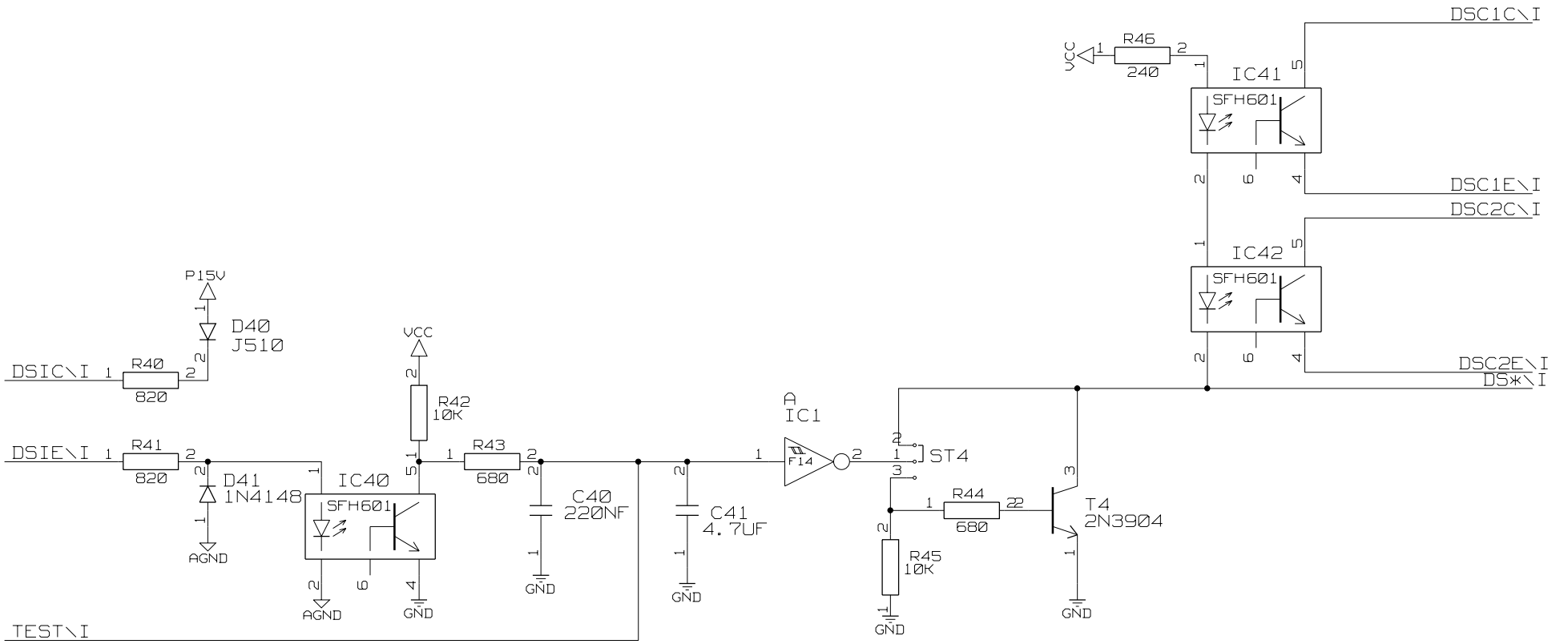

DRAWING

EDMS REF: X	VERSION: X	PCB: X	SYSTEM: X
REF:	TITLE: DIGITAL INPUT MODULE		
CERN IT/CE DIV. 1211 GENEVA 23 SWITZERLAND	ABBREV: DIM		PAGE:
	LAST_MODIFIED=Sun Dec 9 20:18:35 2001		
	DESSIN: STRINDEL EF	ETUDE: G. OLESEN	DATE: 30/11/01

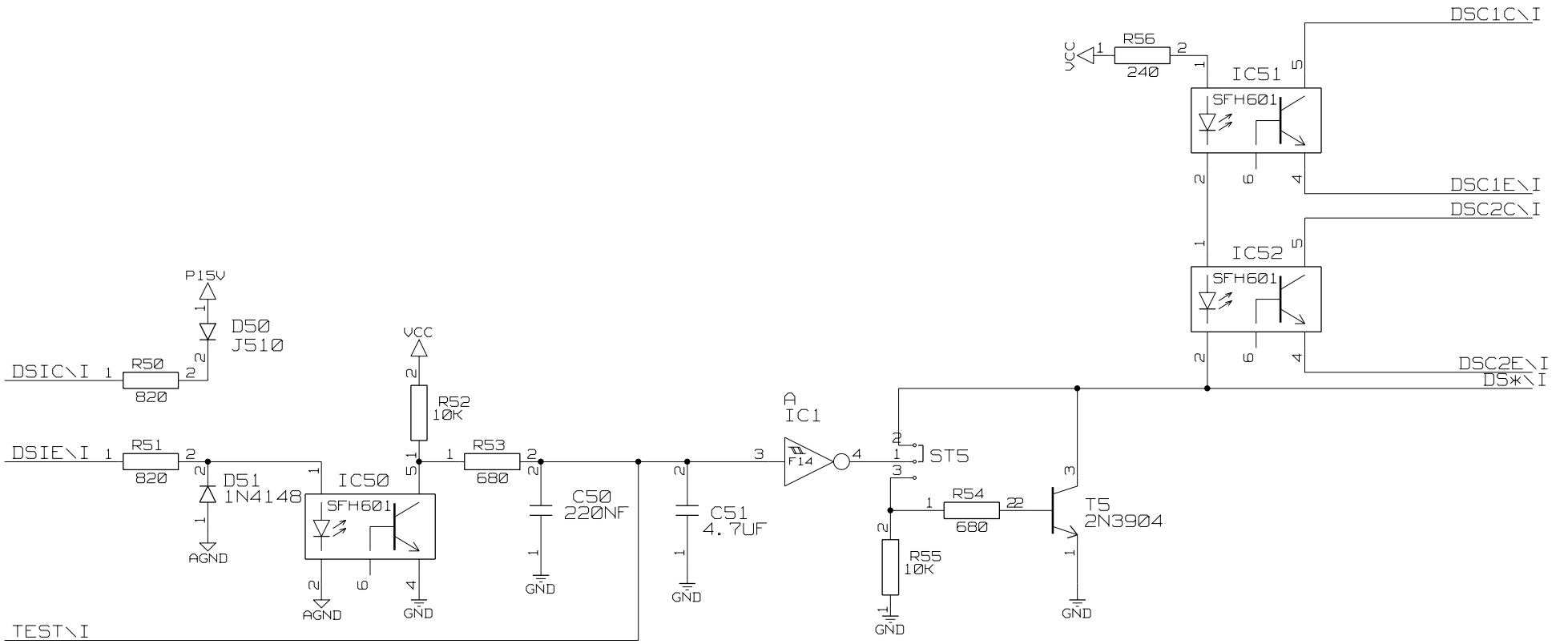

DRAWING

EDMS REF: X	VERSION: X	PCB: X	SYSTEM: X
REF:	TITLE: DIGITAL INPUT MODULE		
CERN IT/CE DIV. 1211 GENEVA 23 SWITZERLAND	ABBREV: DIM		PAGE:
	LAST_MODIFIED=Sun Dec 9 20:18:35 2001		
	DESSIN: STRINDEL EF	ETUDE: G. OLESEN	DATE: 30/11/01

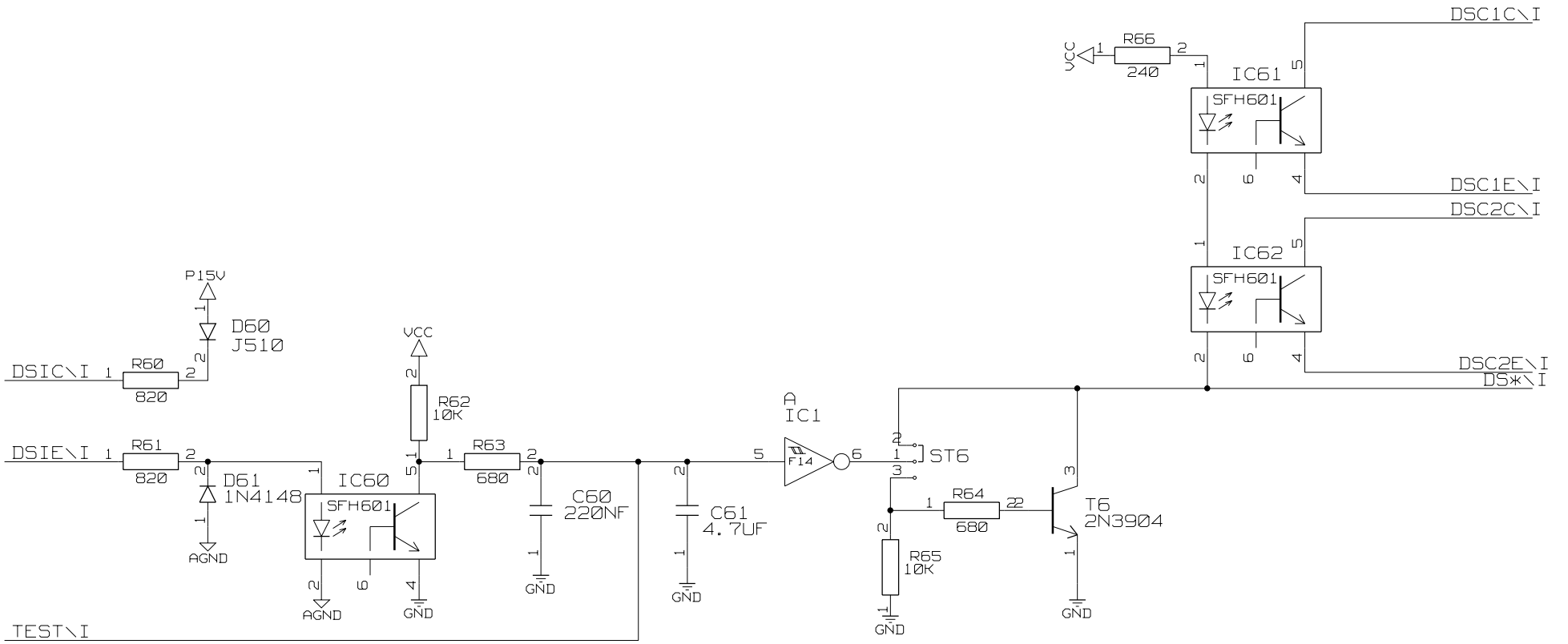

DRAWING

EDMS REF: X	VERSION: X	PCB: X	SYSTEM: X
REF:	TITLE: DIGITAL INPUT MODULE		
CERN IT/CE DIV. 1211 GENEVA 23 SWITZERLAND	ABBREV: DIM		PAGE:
	LAST_MODIFIED=Sun Dec 9 20:18:34 2001		
	DESSIN: STRINDEL EF	ETUDE: G. OLESEN	DATE: 30/11/01

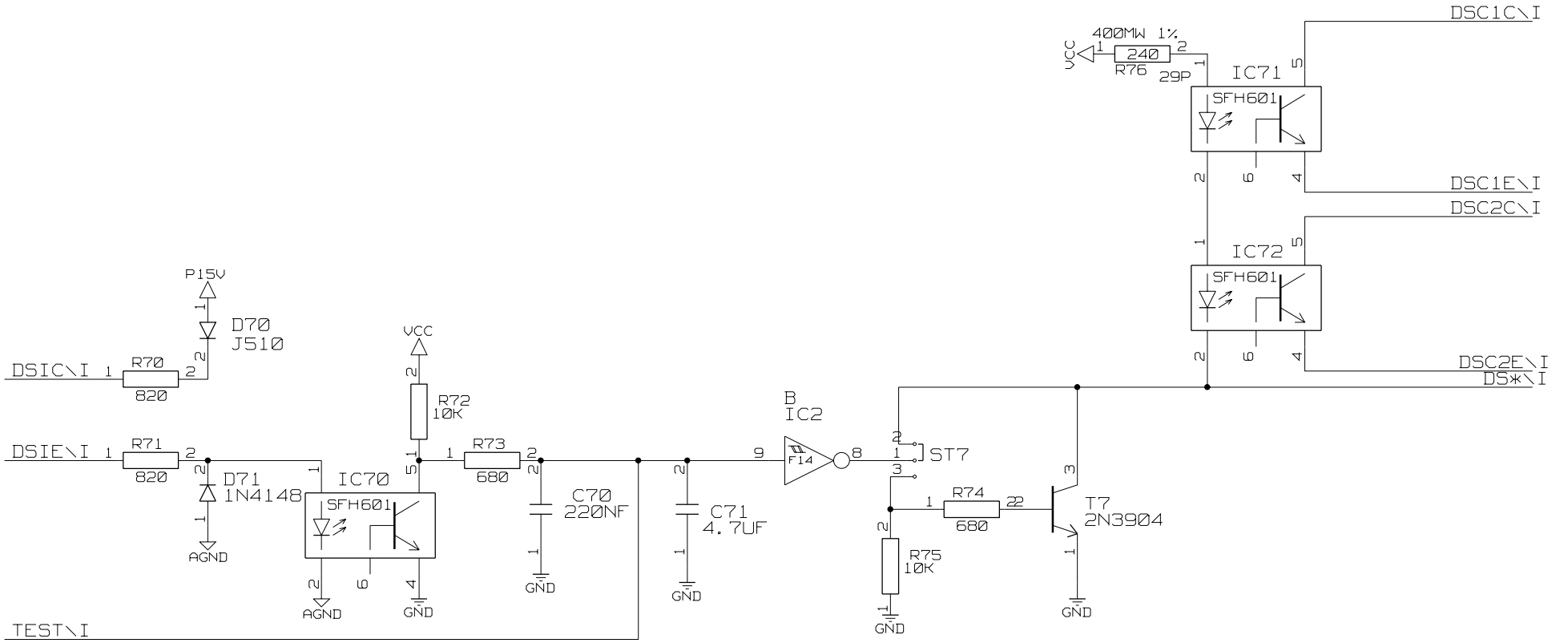

DRAWING

EDMS REF:X	VERSION:X	PCB:X	SYSTEM:X
REF:	TITLE: DIGITAL INPUT MODULE		
IT/CE CERN DIV. 1211 GENEVA 23 SWITZERLAND	ABBREV: DIM		PAGE:
	LAST_MODIFIED=Sun Dec 9 20:18:34 2001		
	DESSIN: STRINDEL EF	ETUDE: G.OLESEN	DATE:30/11/01

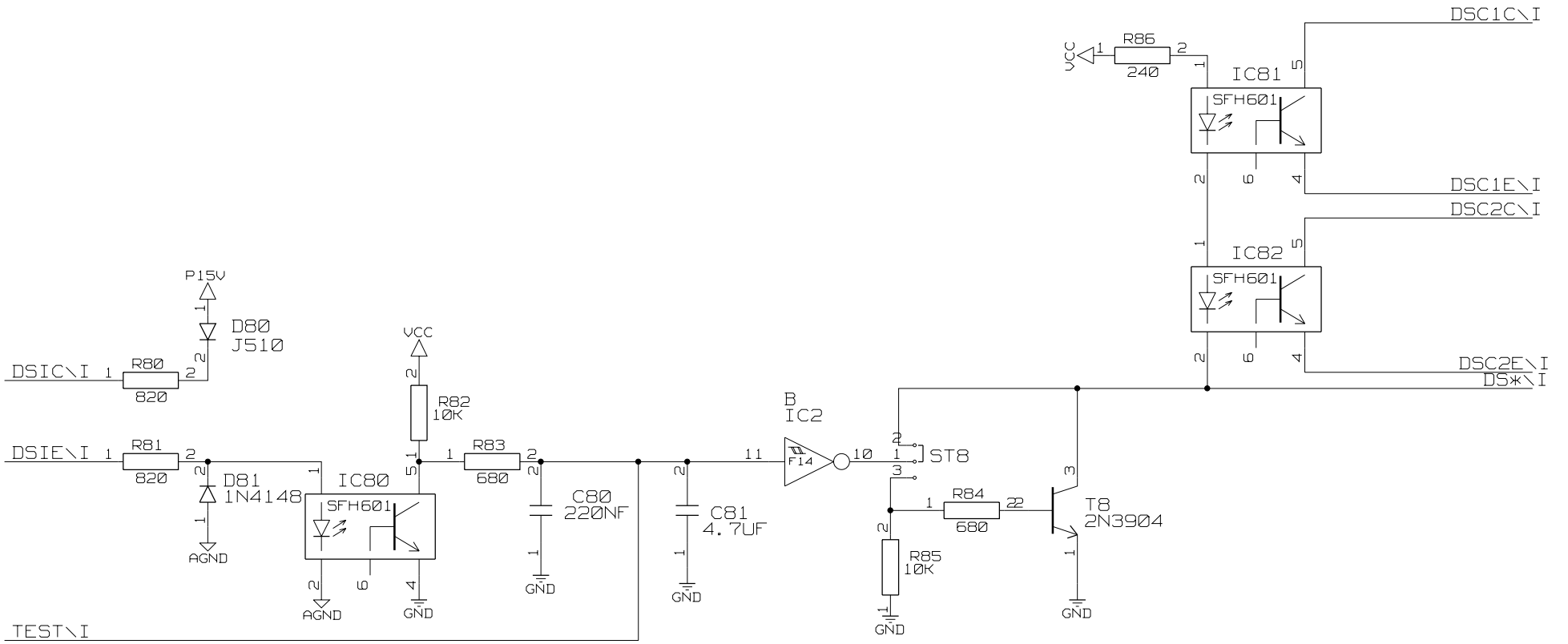

DRAWING

EDMS REF: X	VERSION: X	PCB: X	SYSTEM: X
REF:	TITLE: DIGITAL INPUT MODULE		
CERN IT/CE DIV. 1211 GENEVA 23 SWITZERLAND	ABBREV: DIM		PAGE:
	LAST_MODIFIED=Sun Dec 9 20:18:33 2001		
	DESSIN: STRINDEL EF	ETUDE: G. OLESEN	DATE: 30/11/01

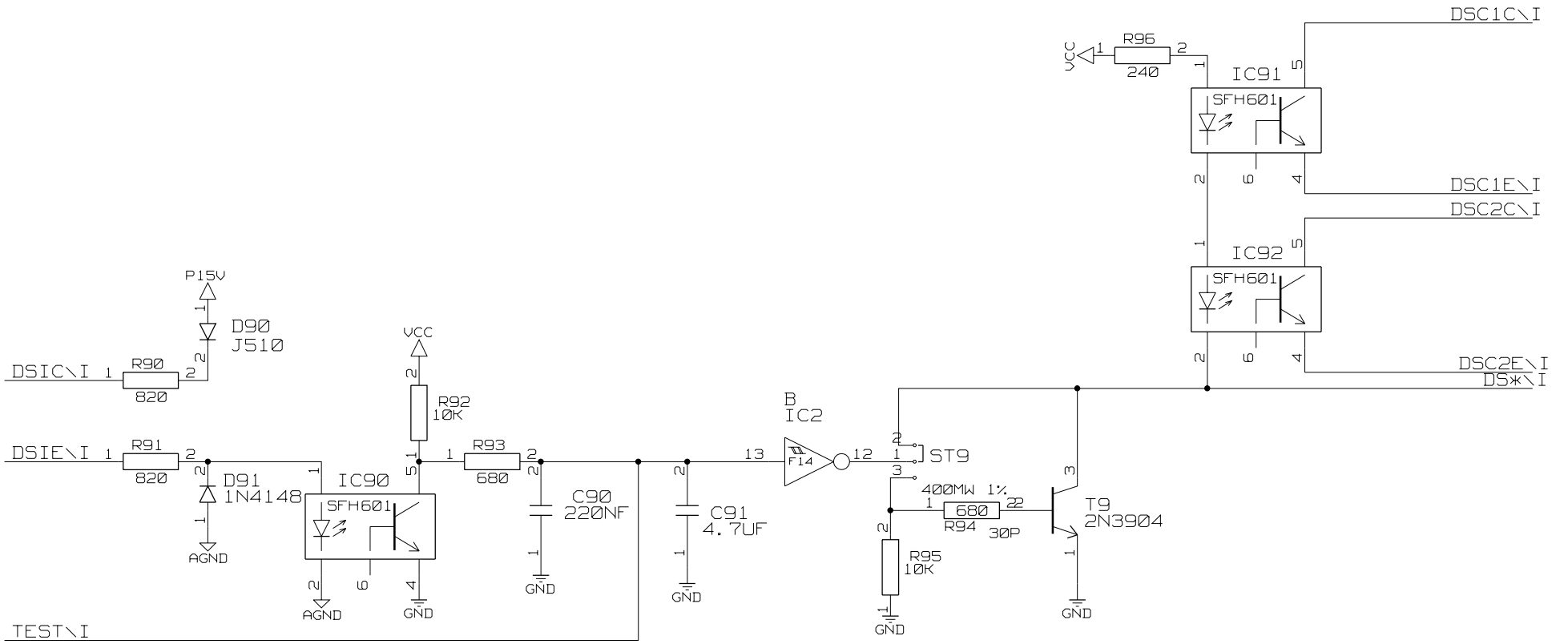

DRAWING

EDMS REF: X	VERSION: X	PCB: X	SYSTEM: X
REF:	TITLE: DIGITAL INPUT MODULE		
CERN IT/CE DIV. 1211 GENEVA 23 SWITZERLAND	ABBREV: DIM		PAGE:
	LAST_MODIFIED=Sun Dec 9 20:18:37 2001		
	DESSIN: STRINDEL EF	ETUDE: G. OLESEN	DATE: 30/11/01

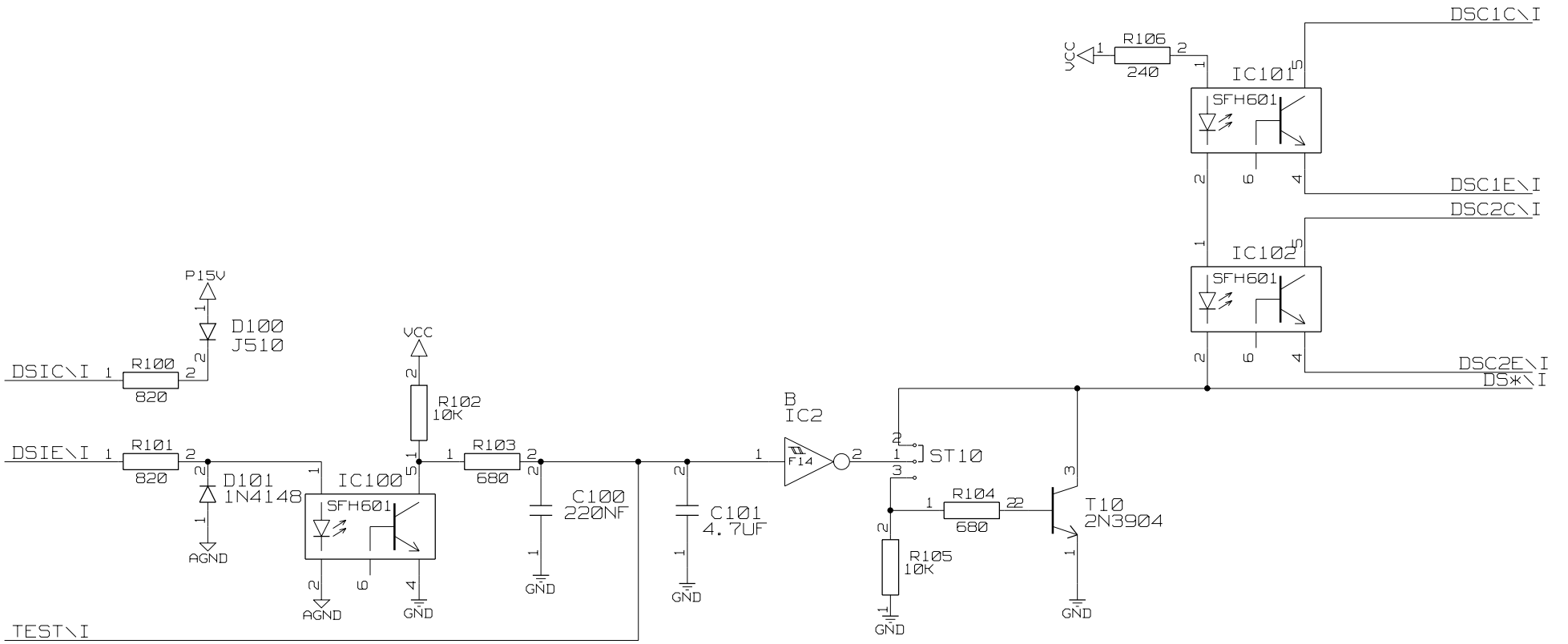

DRAWING

EDMS REF: X	VERSION: X	PCB: X	SYSTEM: X
REF:	TITLE: DIGITAL INPUT MODULE		
CERN IT/CE DIV. 1211 GENEVA 23 SWITZERLAND	ABBREV: DIM		PAGE:
	LAST_MODIFIED=Sun Dec 9 20:18:41 2001		
	DESSIN: STRINDEL EF	ETUDE: G. OLESEN	DATE: 30/11/01

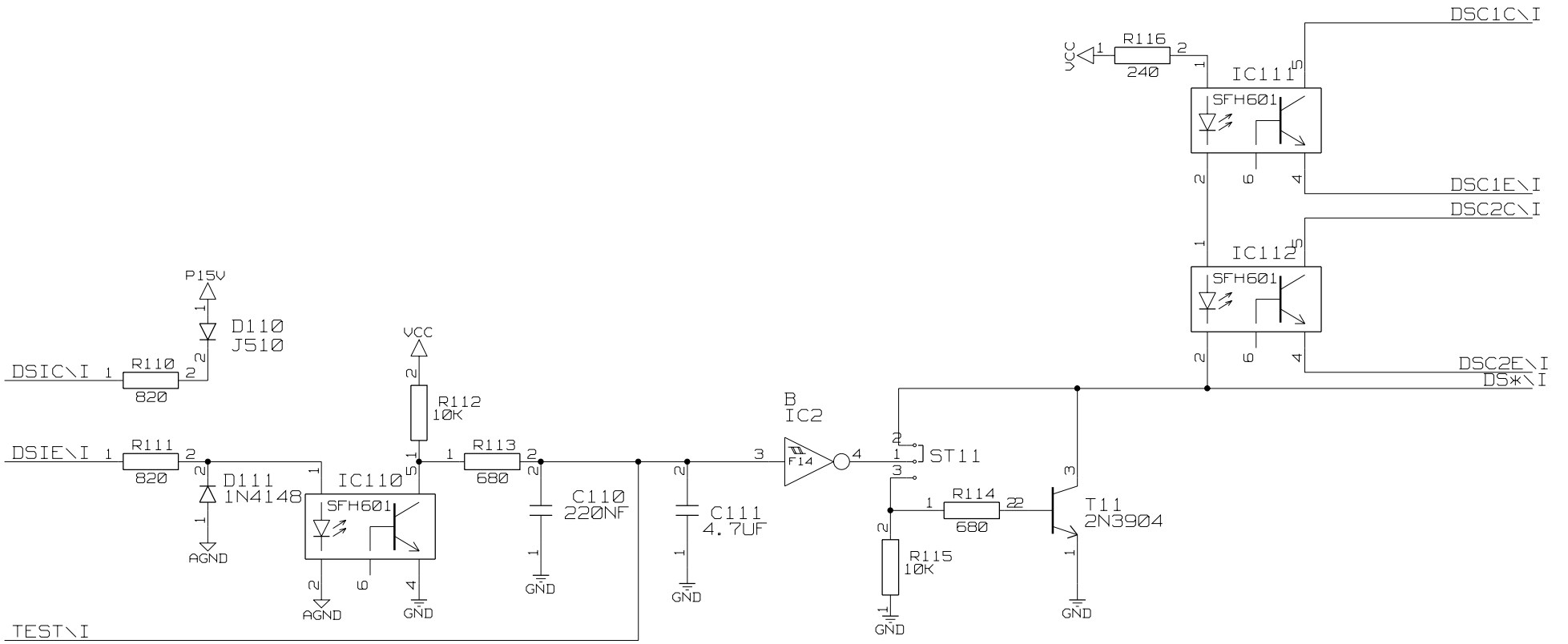

DRAWING

EDMS REF: X	VERSION: X	PCB: X	SYSTEM: X
REF:	TITLE: DIGITAL INPUT MODULE		
CERN IT/CE DIV. 1211 GENEVA 23 SWITZERLAND	ABBREV: DIM		PAGE:
	LAST_MODIFIED=Sun Dec 9 20:18:41 2001		
	DESSIN: STRINDEL EF	ETUDE: G. OLESEN	DATE: 30/11/01

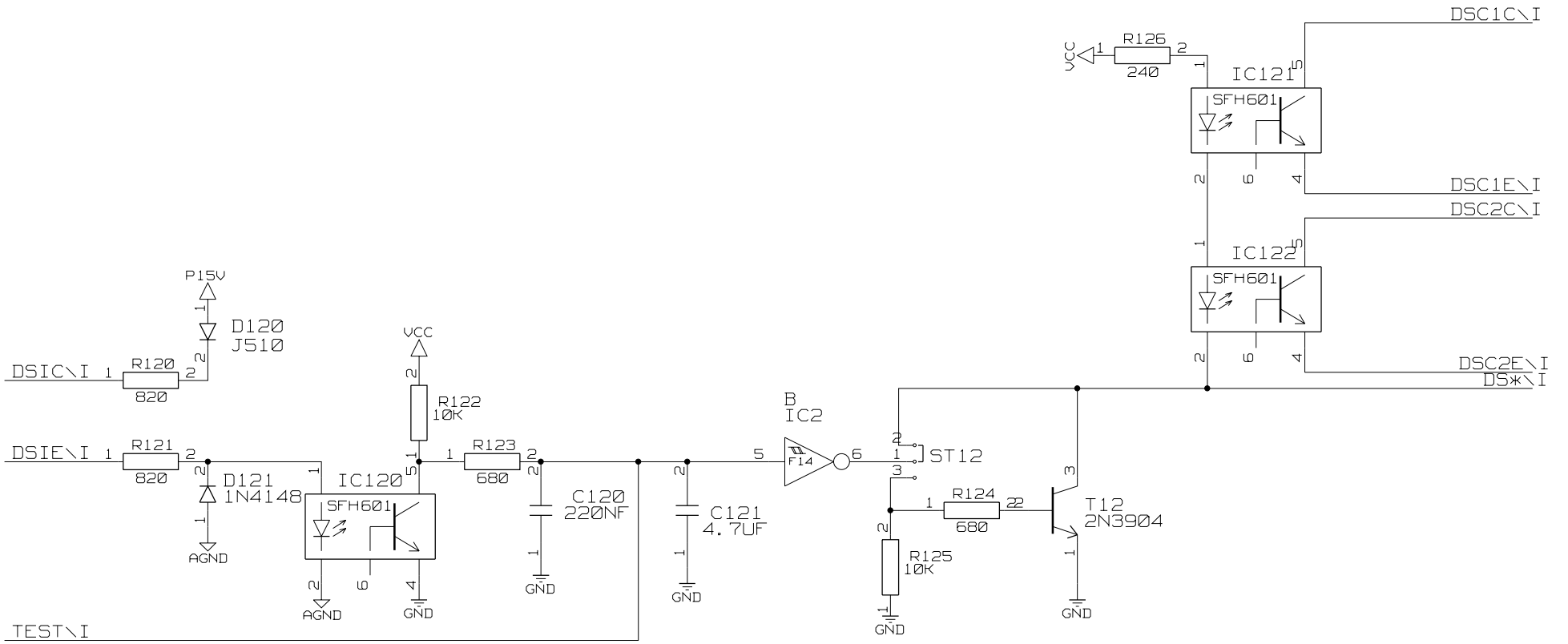

DRAWING

EDMS REF: X	VERSION: X	PCB: X	SYSTEM: X
REF:	TITLE: DIGITAL INPUT MODULE		
IT/CE CERN DIV. 1211 GENEVA 23 SWITZERLAND	ABBREV: DIM		PAGE:
	LAST_MODIFIED=Sun Dec 9 20:18:40 2001		
	DESSIN: STRINDEL EF	ETUDE: G. OLESEN	DATE: 30/11/01

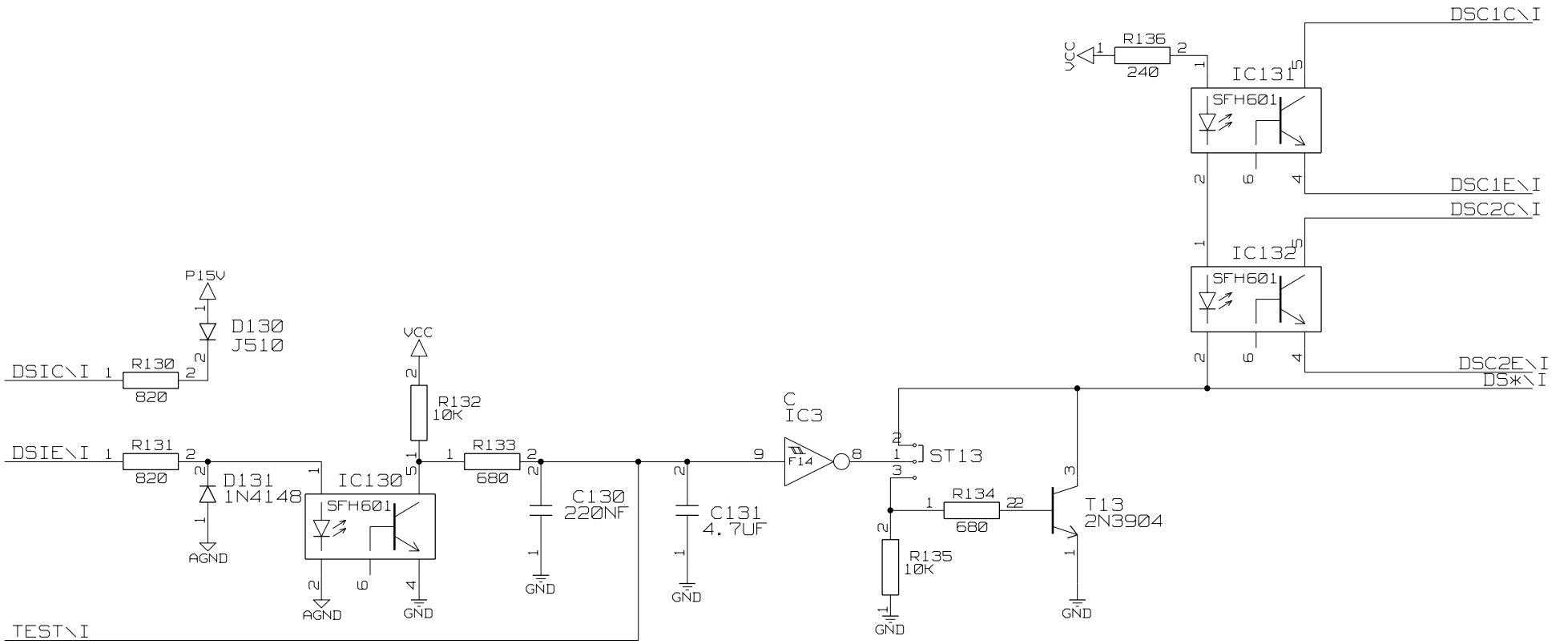

DRAWING

EDMS REF: X	VERSION: X	PCB: X	SYSTEM: X
REF:	TITLE: DIGITAL INPUT MODULE		
IT/CE CERN DIV. 1211 GENEVA 23 SWITZERLAND	ABBREV: DIM		PAGE:
	LAST_MODIFIED=Sun Dec 9 20:18:39 2001		
	DESSIN: STRINDEL EF	ETUDE: G. OLESEN	DATE: 30/11/01

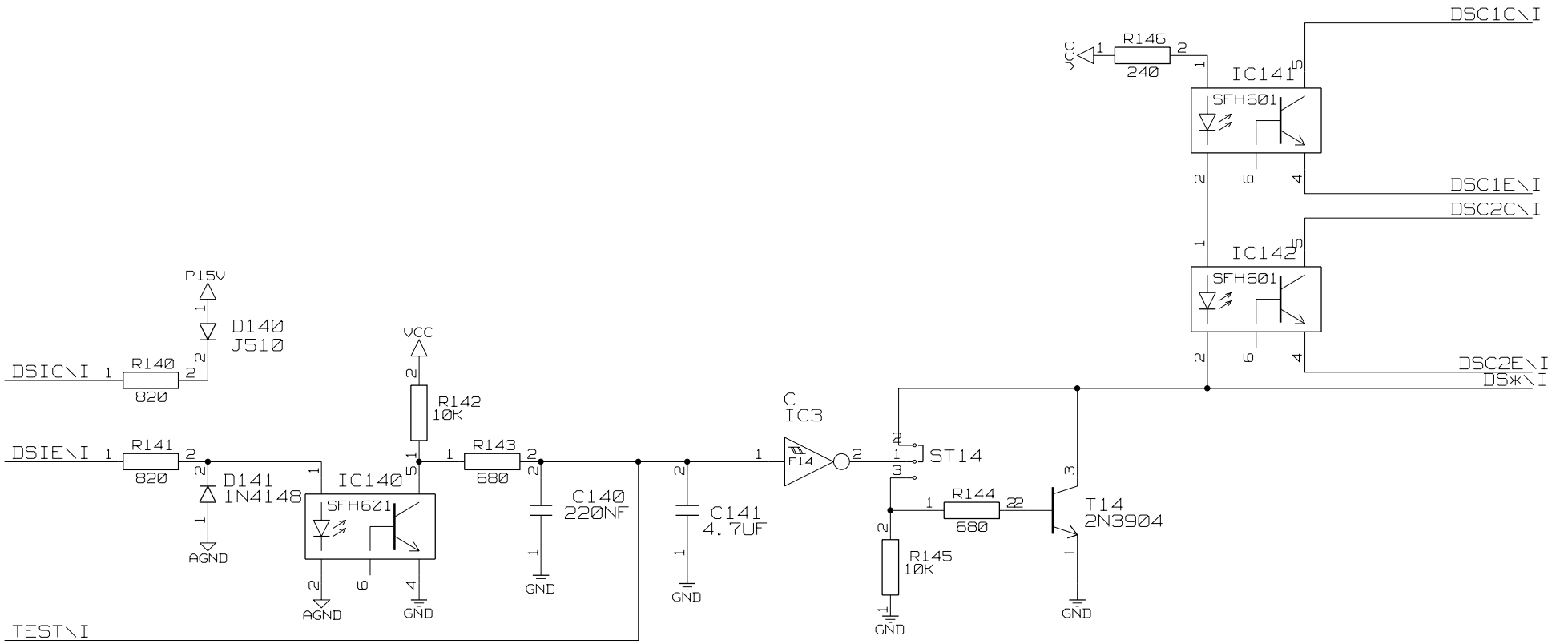

DRAWING

EDMS REF: X	VERSION: X	PCB: X	SYSTEM: X
REF:	TITLE: DIGITAL INPUT MODULE		
IT/CE CERN DIV. 1211 GENEVA 23 SWITZERLAND	ABBREV: DIM		PAGE:
	LAST_MODIFIED=Sun Dec 9 20:18:39 2001		
	DESSIN: STRINDEL EF	ETUDE: G. OLESEN	DATE: 30/11/01

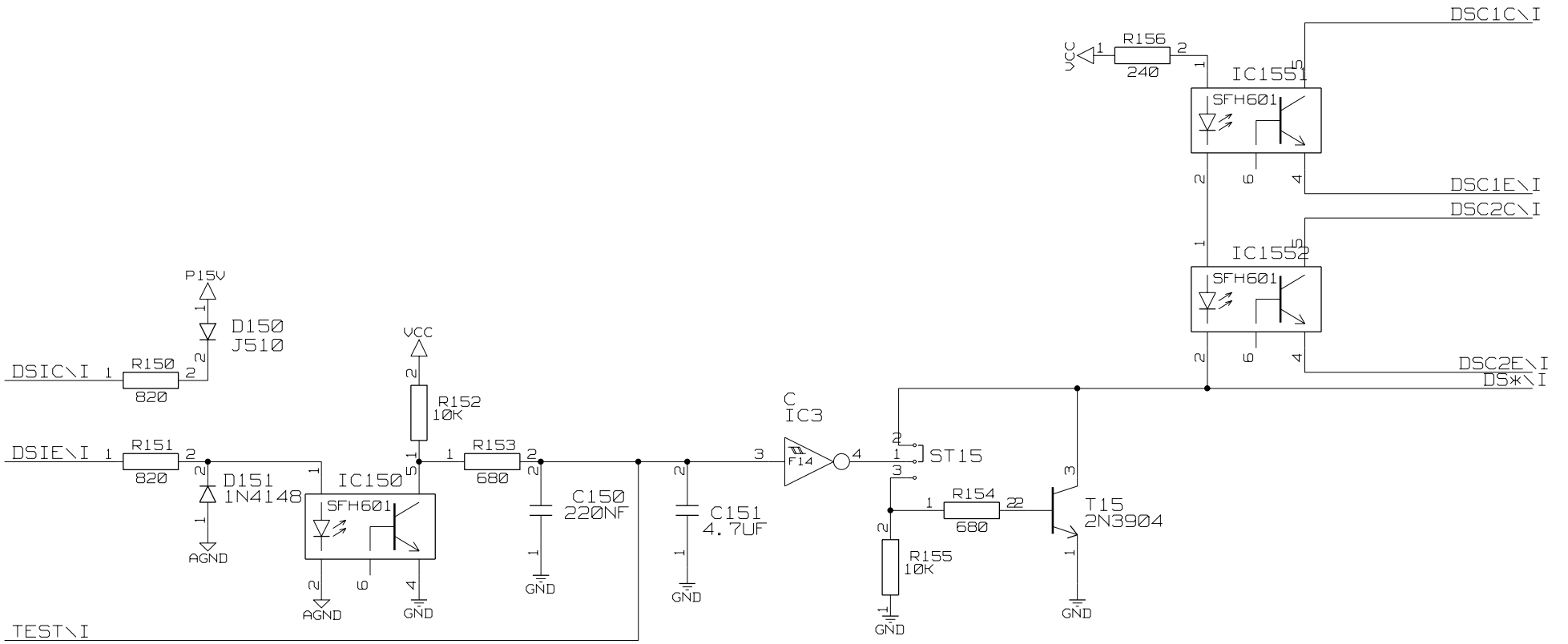

DRAWING

EDMS REF: X	VERSION: X	PCB: X	SYSTEM: X
REF:	TITLE: DIGITAL INPUT MODULE		
CERN IT/CE DIV. 1211 GENEVA 23 SWITZERLAND	ABBREV: DIM		PAGE:
	LAST_MODIFIED=Sun Dec 9 20:18:38 2001		
	DESSIN: STRINDEL EF	ETUDE: G. OLESEN	DATE: 30/11/01

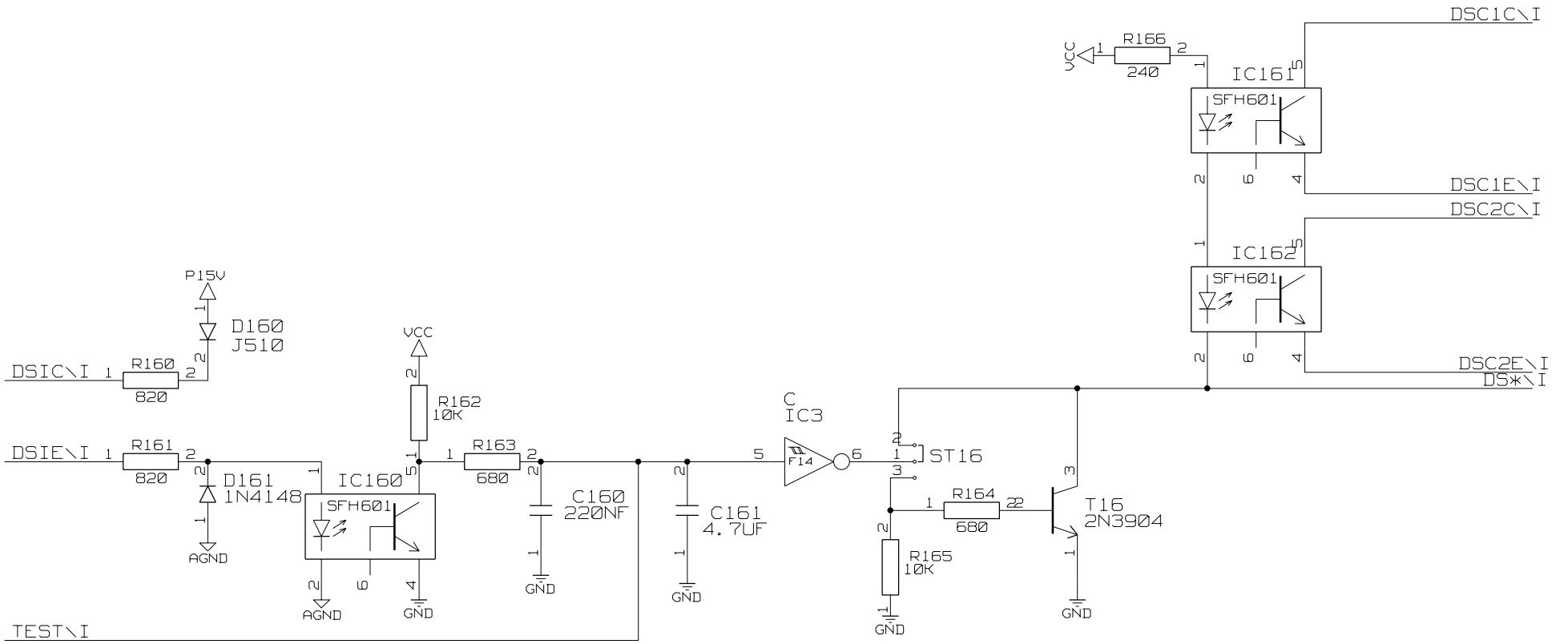

DRAWING

EDMS REF: X	VERSION: X	PCB: X	SYSTEM: X
REF:	TITLE: DIGITAL INPUT MODULE		
IT/CE CERN DIV. 1211 GENEVA 23 SWITZERLAND	ABBREV: DIM		PAGE:
	LAST_MODIFIED=Sun Dec 9 20:18:37 2001		
	DESSIN: STRINDEL EF	ETUDE: G. OLESEN	DATE: 30/11/01

CAM350 PRO V 7.0 : Mon Dec 10 11:44:09 2001 - (Untitled) : ets.gbr

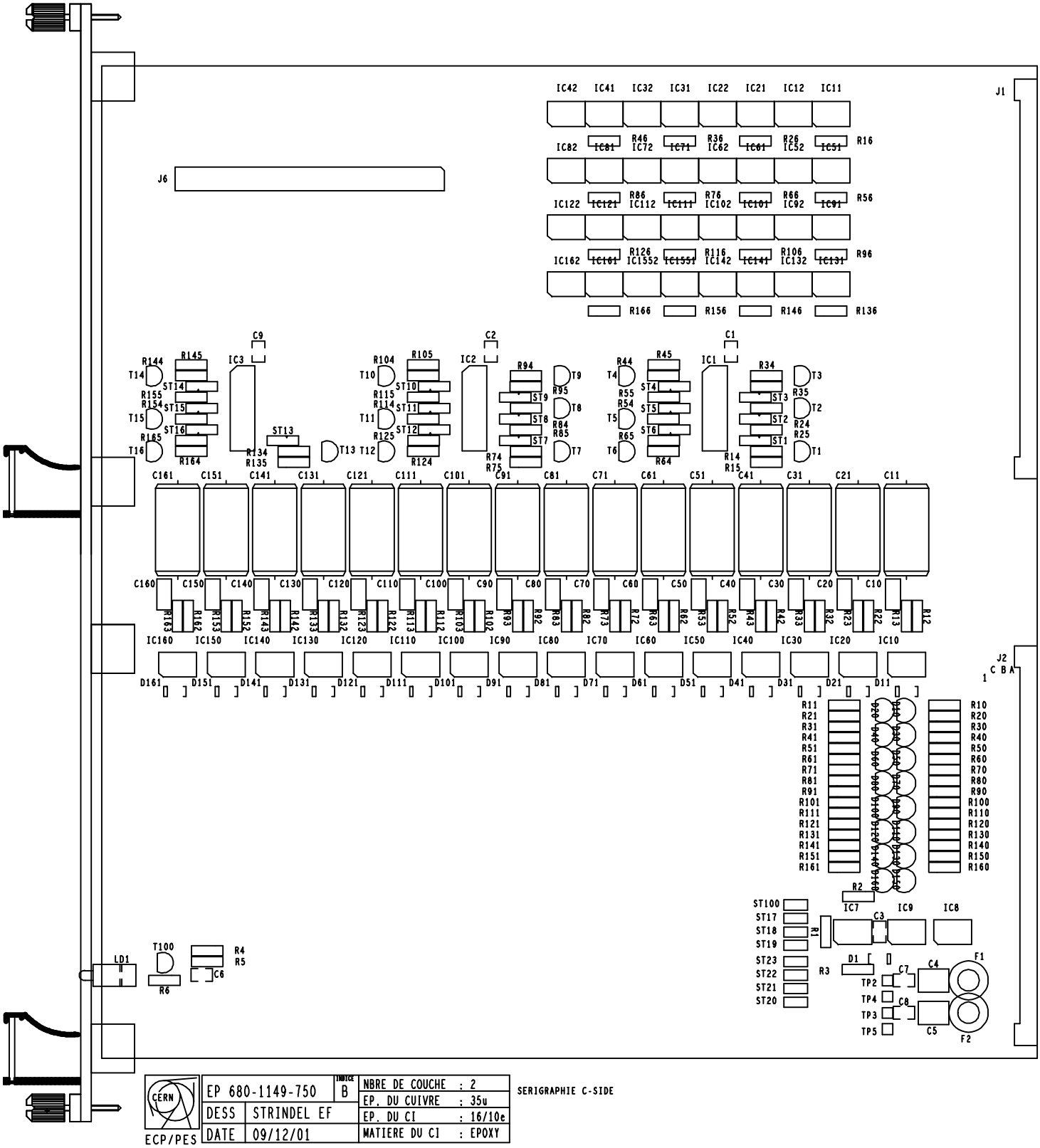

CERN	EP 680-1149-750	INDICE B	NBRE DE COUCHE : 2
	DESS STRINDEL EF		EP. DU CUIVRE : 35u
			EP. DU CI : 16/10e
ECP/PES	DATE 09/12/01		MATIERE DU CI : EPOXY

SERIGRAPHIE C-SIDE

CAM350 PRO V 7.0 : Mon Dec 10 11:44:13 2001 - (Untitled) : etm.gbr

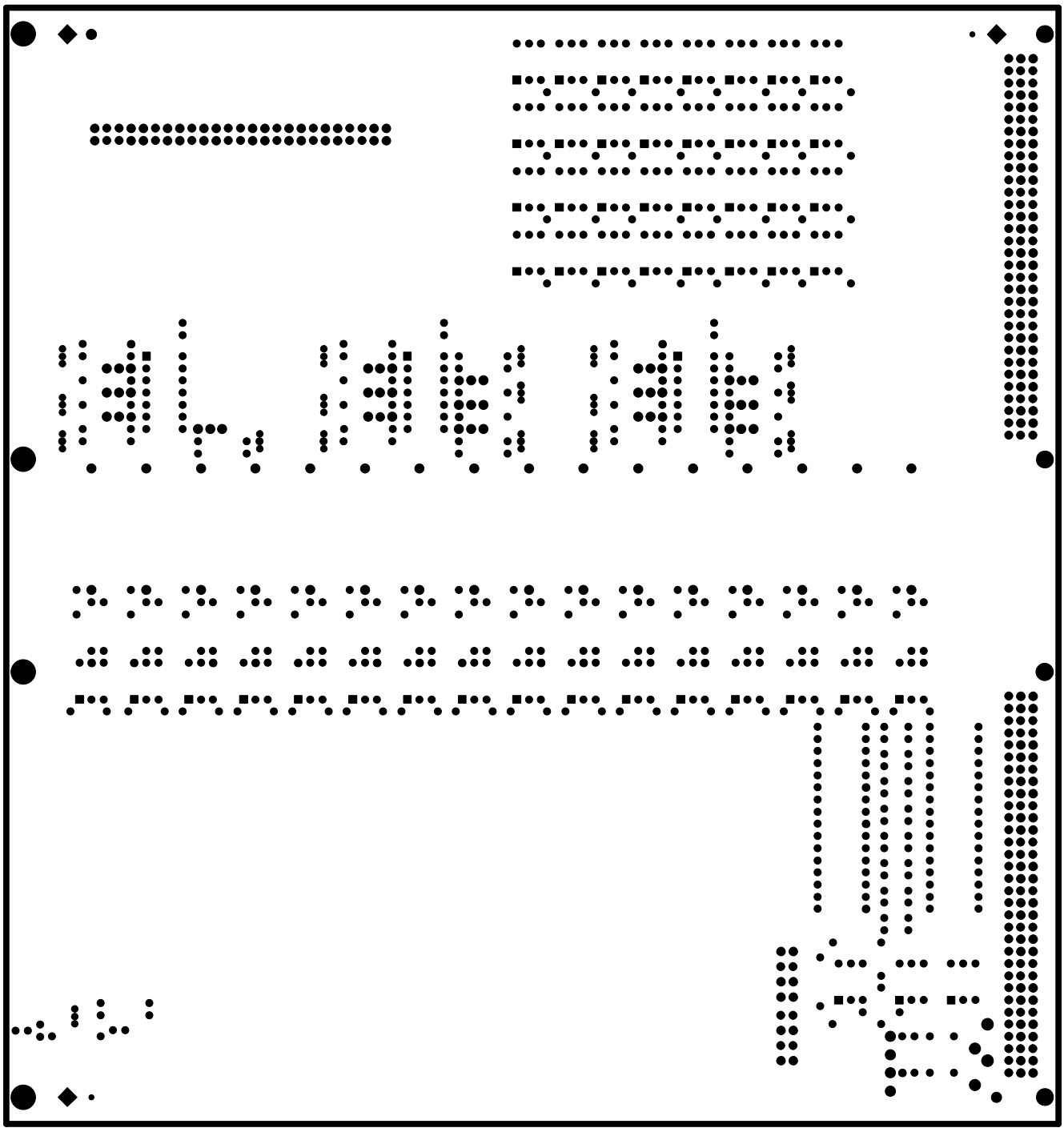

CERN ECP/PES	EP 680-1149-750	INDICE B	NBRE DE COUCHE : 2
			EP. DU CUIVRE : 35u
	DESS	STRINDEL EF	EP. DU CI : 16/10e
	DATE	09/12/01	MATIERE DU CI : EPOXY

LAQUE ARRET DE SOUDURE C-SIDE

CAM350 PRO V 7.0 : Mon Dec 10 11:44:30 2001 - (Untitled) : ltop.gbr

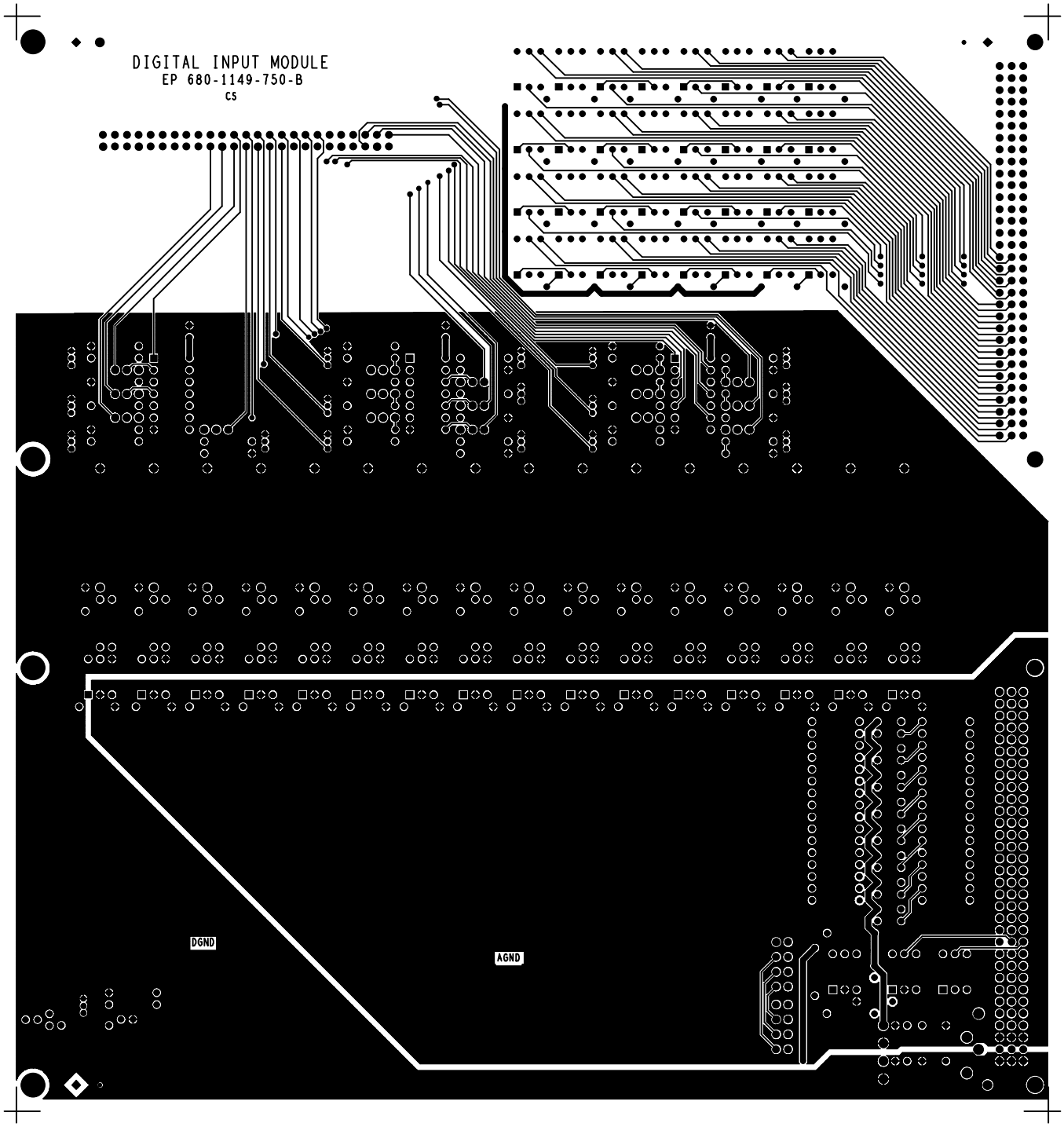

CERN ECP/PES	EP 680-1149-750	INDICE B	NBRE DE COUCHE : 2	FACE COMPOSANTS
	DESS STRINDEL EF		EP. DU CUIVRE : 35u	
			EP. DU CI : 16/10e	
	DATE 09/12/01		MATIERE DU CI : EPOXY	

CAM350 PRO V 7.0 : Mon Dec 10 11:44:35 2001 - (Untitled) : lbot.gbr

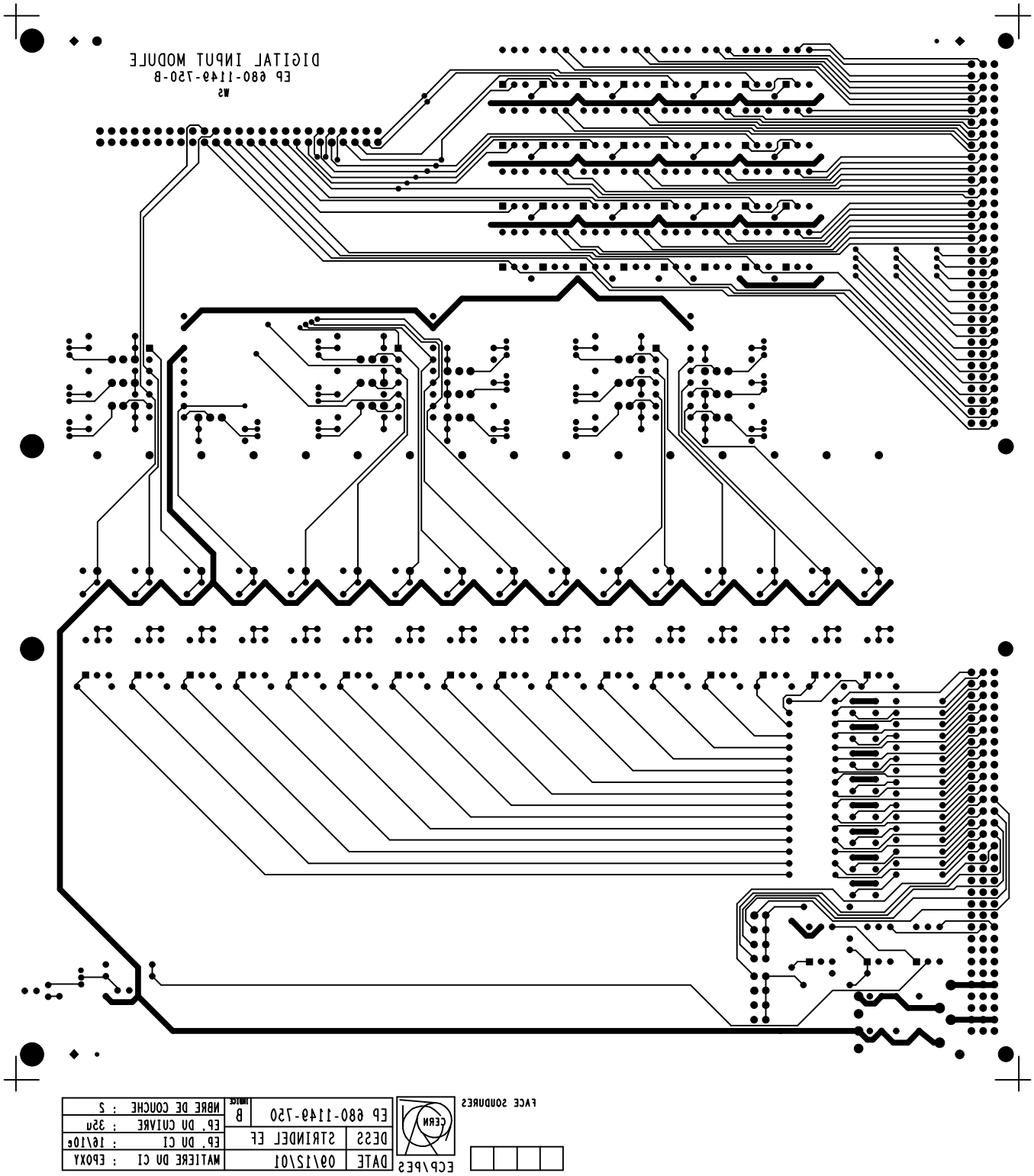

CAM350 PRO V 7.0 : Mon Dec 10 11:44:38 2001 - (Untitled) : ebm.gbr

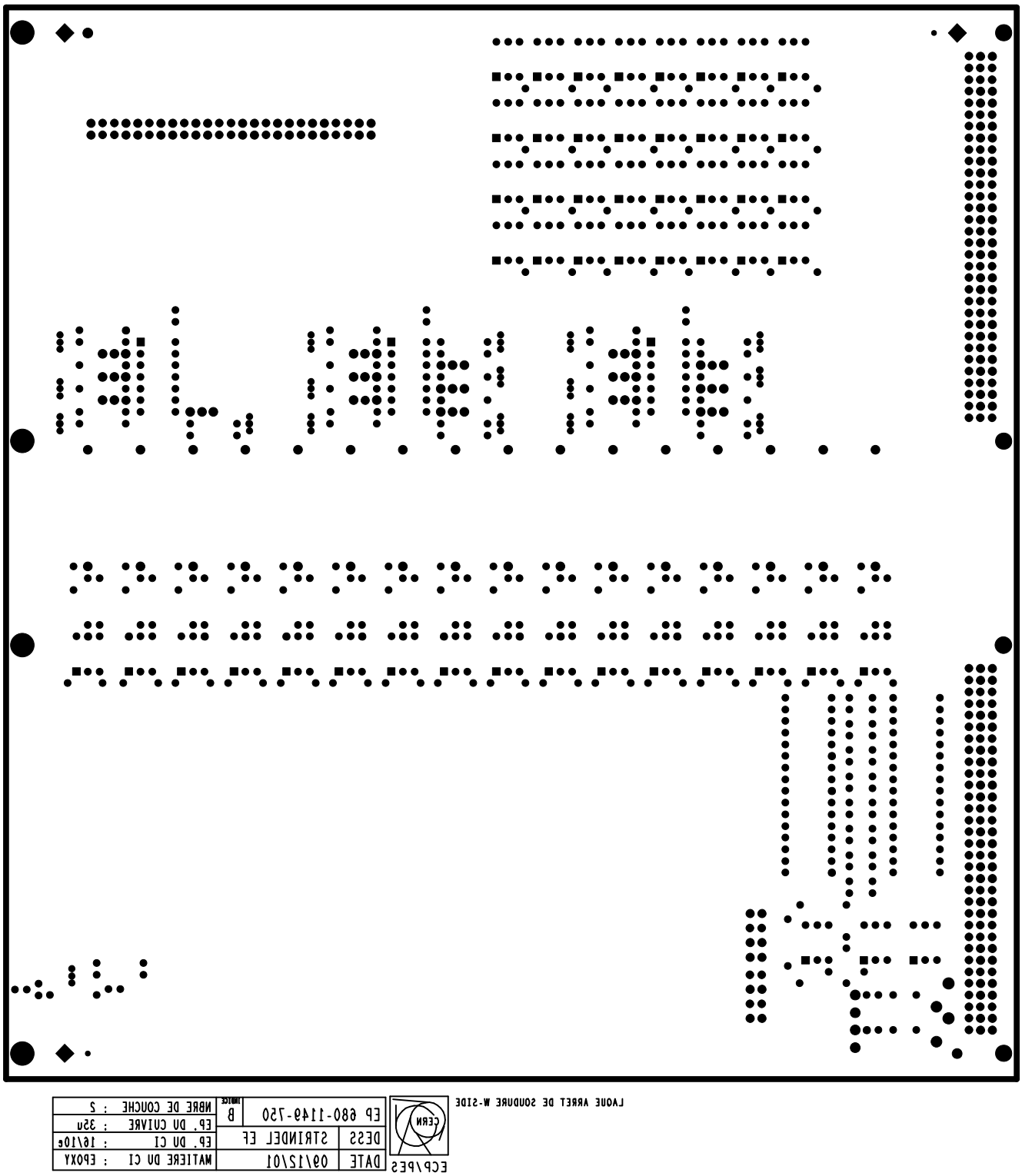

ECP\PES	DATE	09\12\01	MATIERE DU CI : EPOXY
	DESS	STRINDEL EF	EP. DU CI : 16\10e
	EP 680-1149-750	B	EP. DU CUIVRE : 35u
			NBRE DE COUCHE : 2

LAQUE ARRET DE SOUDURE W-SIDE

CAM350 PRO V 7.0 : Mon Dec 10 11:44:41 2001 - (Untitled) : drill.gbr

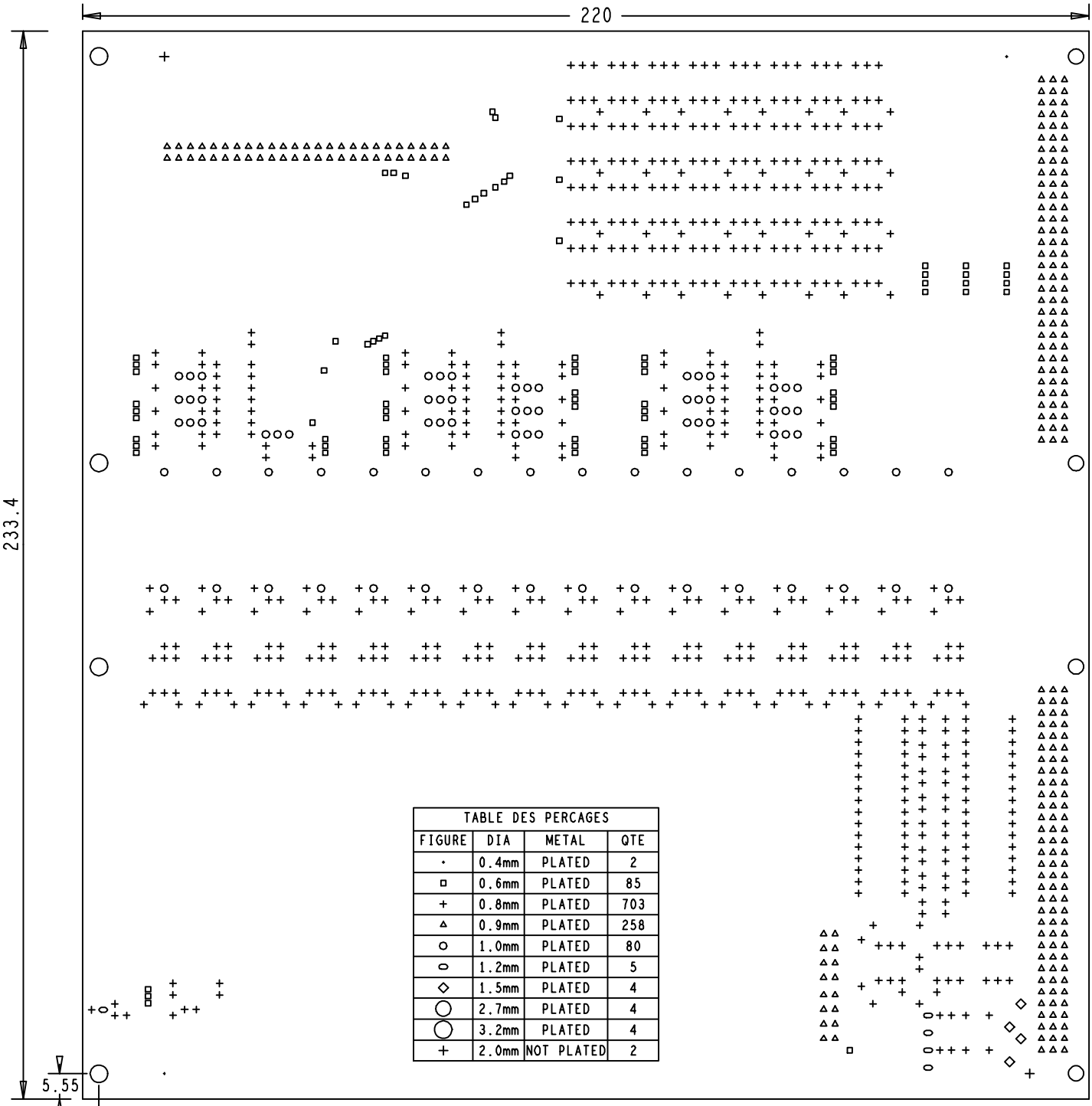

TABLE DES PERCAGES			
FIGURE	DIA	METAL	QTE
·	0.4mm	PLATED	2
□	0.6mm	PLATED	85
+	0.8mm	PLATED	703
△	0.9mm	PLATED	258
○	1.0mm	PLATED	80
⬭	1.2mm	PLATED	5
◇	1.5mm	PLATED	4
◯	2.7mm	PLATED	4
◯	3.2mm	PLATED	4
+	2.0mm	NOT PLATED	2

CERN	EP 680-1149-750	INDICE B	NBRE DE COUCHE : 2
			EP. DU CUIVRE : 35u
	DESS	STRINDEL EF	EP. DU CI : 16/10e
ECP/PES	DATE	09/12/01	MATIERE DU CI : EPOXY

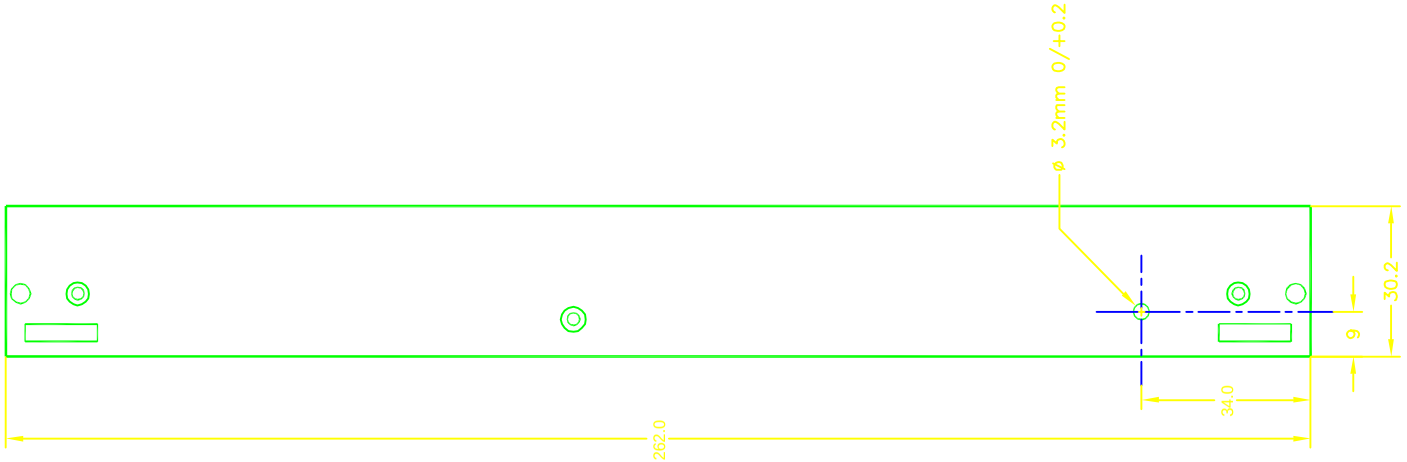

ATOS FRONT PANEL 6U-6TE

Digital Input Module	ECHELLE SCALE		NOM	DATE
		DESSINE	S.TRINDEL EF	10/12/01
		CONTROLE	Gert OLESEN	
FRONT PANEL DRILLING		VU		
		REMPLACE	IND.A le 27/11/97 EF	

CERN

ORGANISATION EUROPEENNE POUR LA RECHERCHE NUCLEAIRE
EUROPEAN ORGANIZATION FOR NUCLEAR RESEARCH
GENEVE

EP 680-1149-A751-3

INDICE

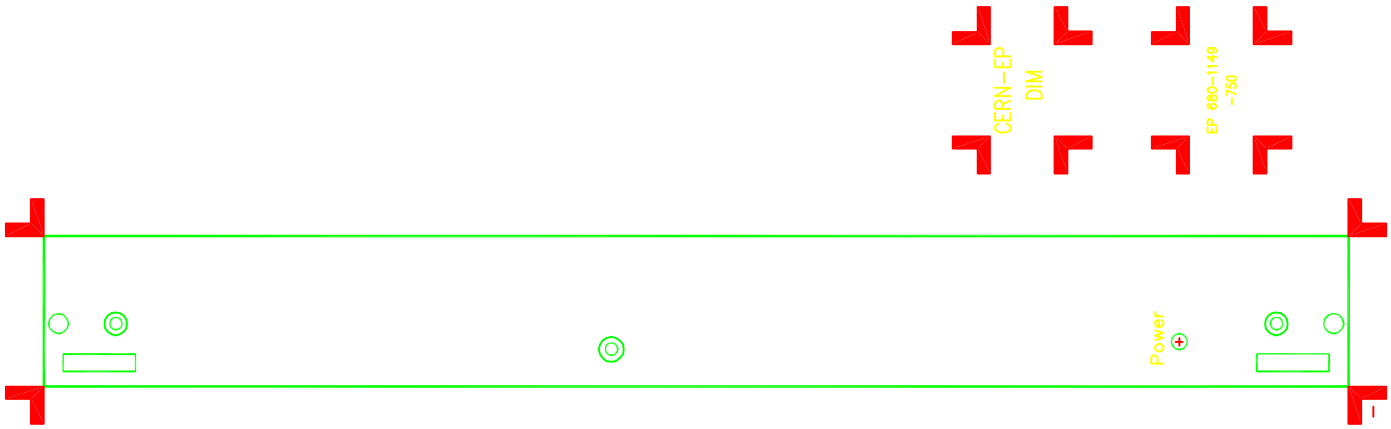

ATOS FRONT PANEL 6U-6TE

Digital Input Module	ECHELLE SCALE		NOM	DATE
		DESSINE	S.TRINDEL EF	10/12/01
		CONTROLE	Gert OLESEN	
		VU		
FRONT PANEL ENGRAVING		REMPLACE	IND.A le 27/11/97 EF	
CERN — ORGANISATION EUROPEENNE POUR LA RECHERCHE NUCLEAIRE / EUROPEAN ORGANIZATION FOR NUCLEAR RESEARCH GENEVE		EP 680-1149-A750-3		INDICE

Device	Qty	Value	Tol	Power	Ref part
08.56.93.014.2	3	74F14N			IC1-IC3
08.SFH601	51	SFH601-1			IC7-IC12,IC1551-IC1552,IC20-IC22,IC30-IC32,IC40-IC42,IC50-IC52, IC60-IC62,IC70-IC72,IC80-IC82,IC90-IC92,IC100-IC102,IC110-IC112, IC120-IC122,IC130-IC132,IC140-IC142,IC150,IC160-IC162
08.53.31.640.8	17	2N3904			T1-T16,T100
08.51.11.100.3	1	1N4448			D1
J510	16	J510		3.6mA	D10,D20,D30,D40,D50,D60,D70,D80,D90,D100,D110,D120,D130,D140,D150,D160
08.51.11.1N4148	16	1N4148			D11,D21,D31,D41,D51,D61,D71,D81,D91,D101,D111,D121,D131,D141,D151,D161
07.88.10.670.3	1	26.05.1.0.1.1		GREEN	LD1

ALL IC'S MOUNTED ON SOCKETS!

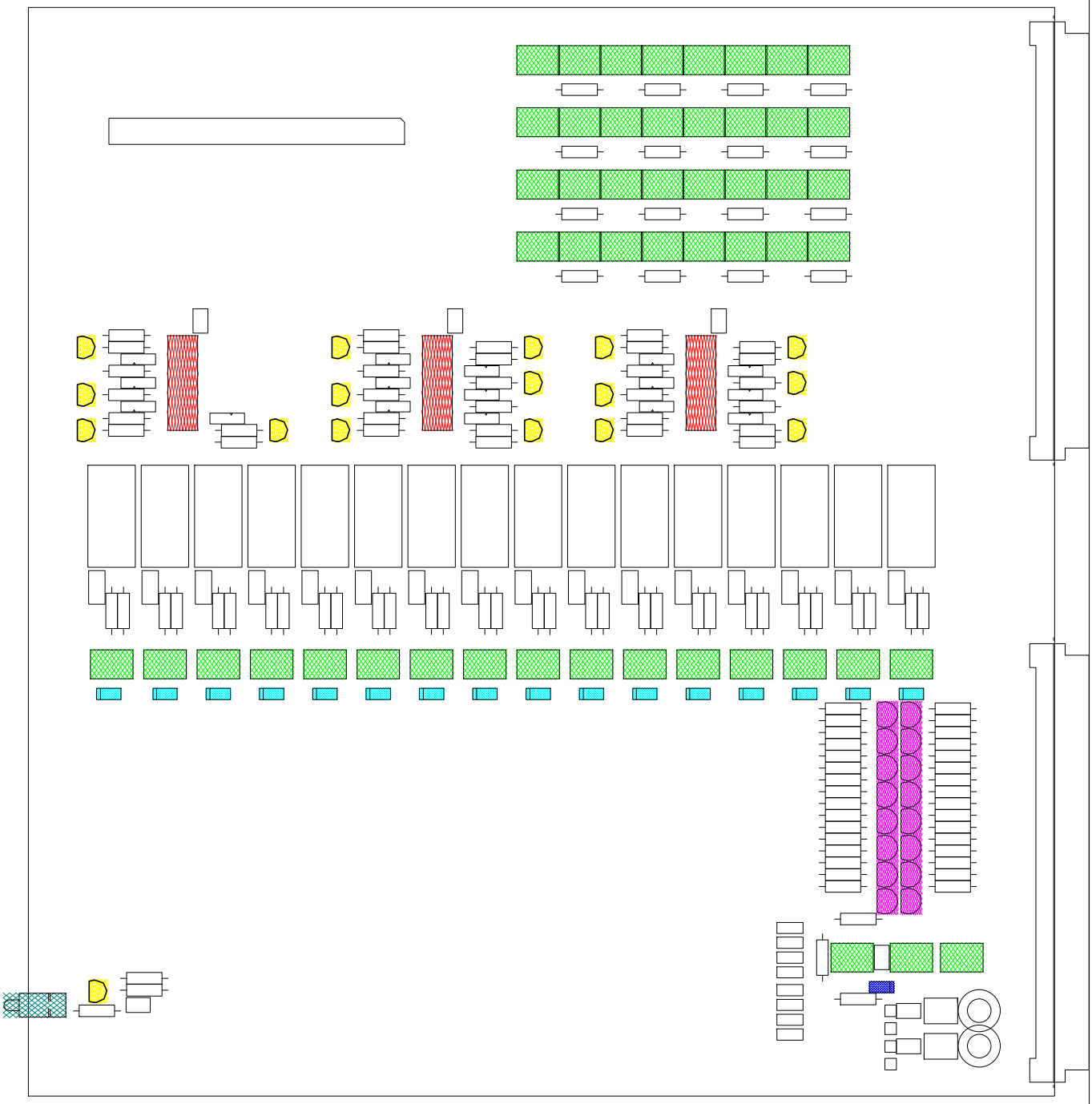

BUREAU D'ETUDES EST/DEM/BE

Page 1 / 4

29/01/2002

ORGANISATION EUROPEENNE POUR
LA RECHERCHE NUCLEAIRE
EUROPEAN ORGANISATION FOR NUCLEAR RESEARCH
GENEVE

TOP

Device	Qty	Value	Tol	Power	Ref part
10.11.01.360.3	7	100nF		50V	C1-C3,C6-C9
10.35.07.500.7	2	1uF		100V	C4-C5
10.35.07.422.4	16	220nF		100V	C10,C20,C30,C40,C50,C60,C70,C80,C90,C100,C110,C120,C130,C140,C150,C160
10.36.06.230.8	16	4.7uF		250V	C11,C21,C31,C41,C51,C61,C71,C81,C91,C101,C111,C121,C131,C141,C151,C161
11.22.10.415.3	1	1.5K	1%	0.4W	R1
11.22.10.368.3	34	680	1%	0.4W	R2-R3,R13-R14,R23-R24,R33-R34,R43-R44,R53-R54,R63-R64,R73-R74,R83-R84, R93-R94,R103-R104,R113-R114,R123-R124,R133-R134,R143-R144,R153-R154, R163-R164
11.22.10.327.2	1	270	1%	0.4W	R4

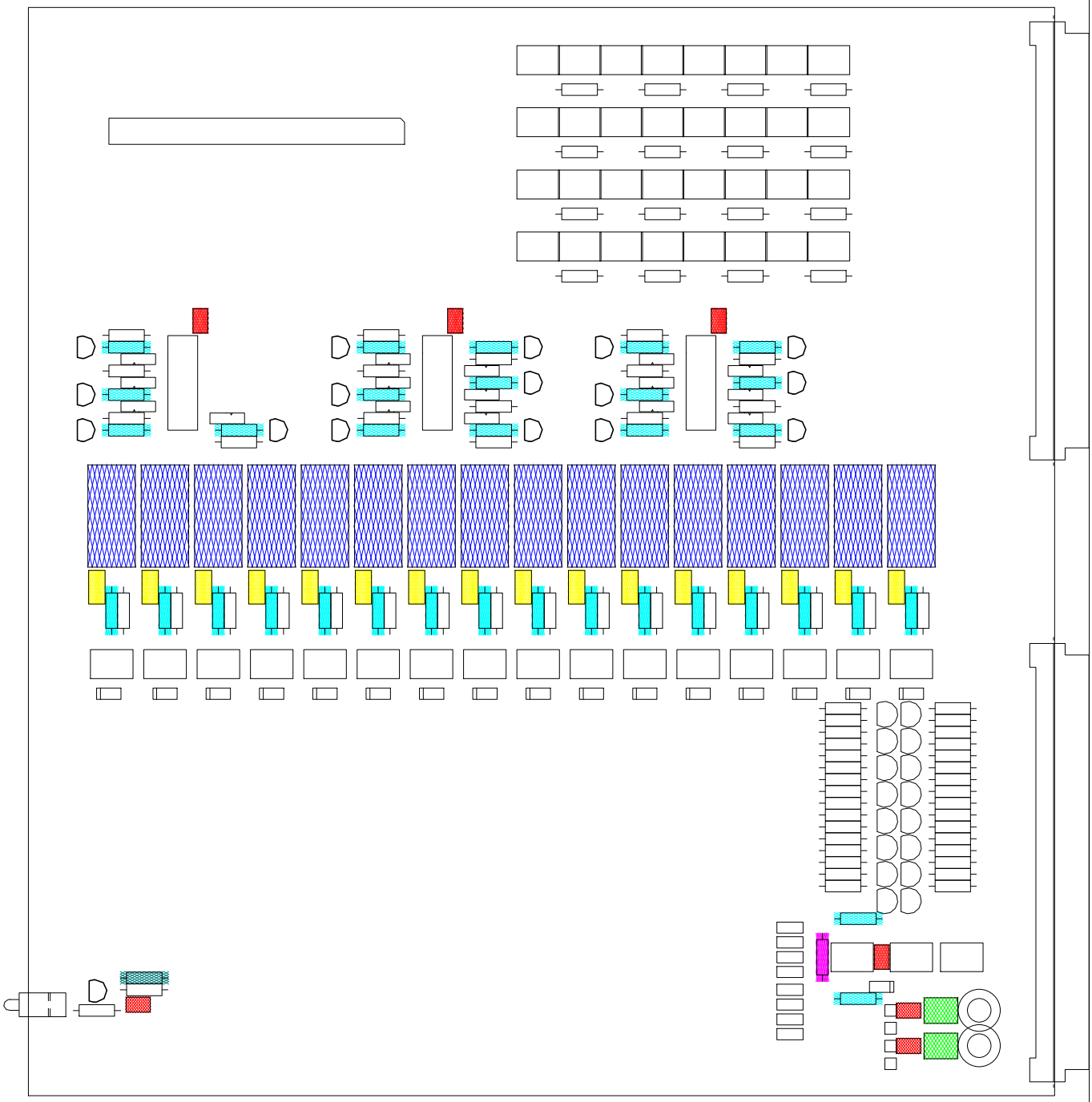

BUREAU D'ETUDES EST/DEM/BE

Page 2 / 4

29/01/2002

ORGANISATION EUROPEENNE POUR LA RECHERCHE NUCLEAIRE
EUROPEAN ORGANISATION FOR NUCLEAR RESEARCH
GENEVE

TOP

Device	Qty	Value	Tol	Power	Ref part
11.22.10.439.5	1	3.9K	1%	0.4W	R5
11.22.10.347.8	1	470	1%	0.4W	R6
11.22.10.382.5	32	820	1%	0.4W	R10-R11,R20-R21,R30-R31,R40-R41,R50-R51,R60-R61,R70-R71,R80-R81, R90-R91,R100-R101,R110-R111,R120-R121,R130-R131,R140-R141,R150-R151, R160-R161
11.22.10.510.5	32	10K	1%	0.4W	R12,R15,R22,R25,R32,R35,R42,R45,R52,R55,R62,R65,R72,R75,R82,R85,R92, R95,R102,R105,R112,R115,R122,R125,R132,R135,R142,R145,R152,R155,R162, R165
11.22.10.324.5	16	240	1%	0.4W	R16,R26,R36,R46,R56,R66,R76,R86,R96,R106,R116,R126,R136,R146,R156,R166
06.73.03.500.8	2	FUSE HOLDER			F1-F2
09.61.33.315.7	2	0903.196.2921			J1-J2

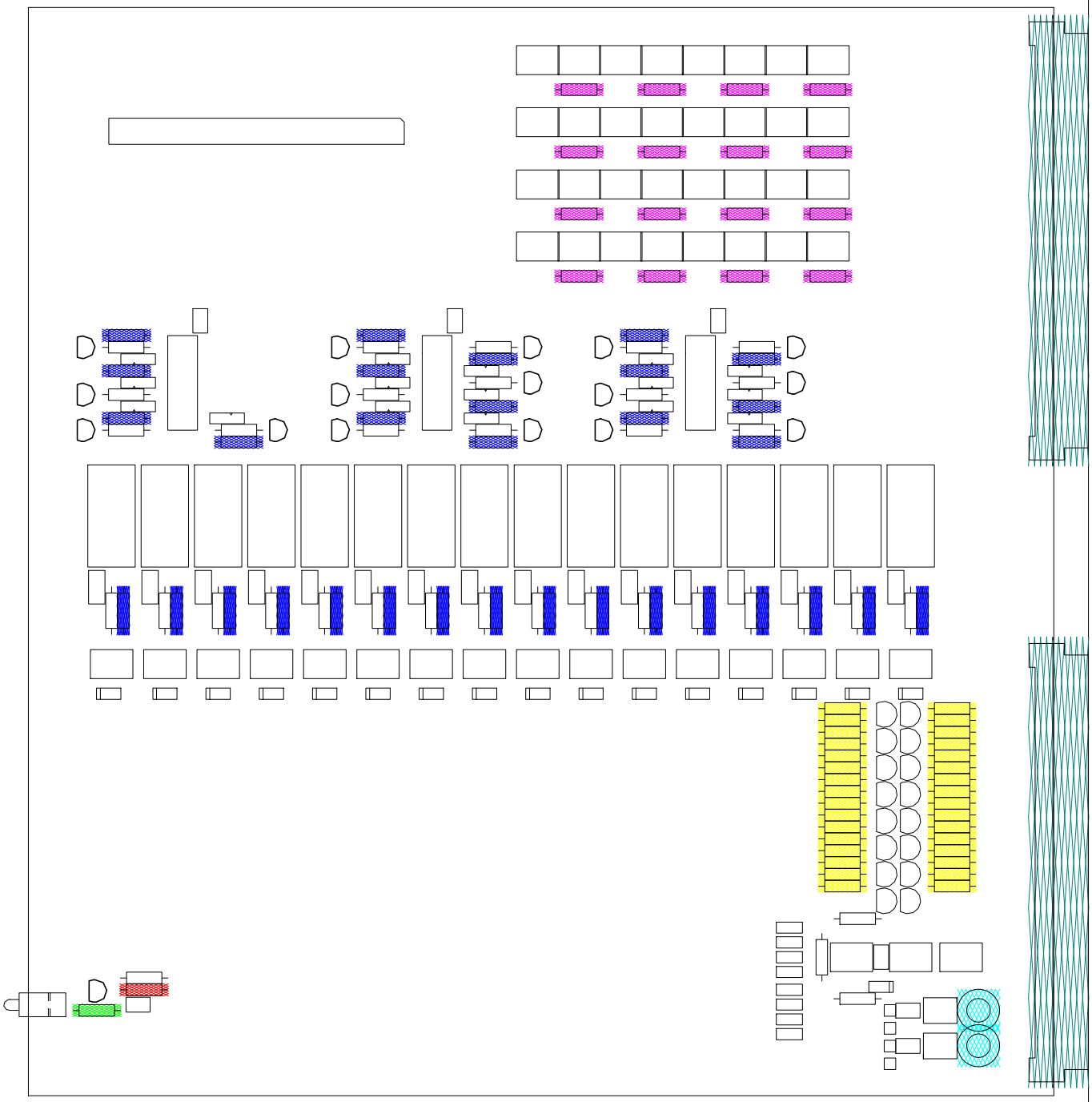

BUREAU D'ETUDES EST/DEM/BE

Page 3 / 4

29/01/2002

ORGANISATION EUROPEENNE POUR LA RECHERCHE NUCLEAIRE
EUROPEAN ORGANISATION FOR NUCLEAR RESEARCH
GENEVE

TOP

Device	Qty	Value	Tol	Power	Ref part
09.55.05.150.0	1	38903581-50400			J6
TP	4	TP		Not Mounted	TP2-TP5
07.88.24-JUMPINV	16	STRAP3			ST1-ST16
07.88.24-VKDEG	8	JUMPER			ST17-ST23,ST100

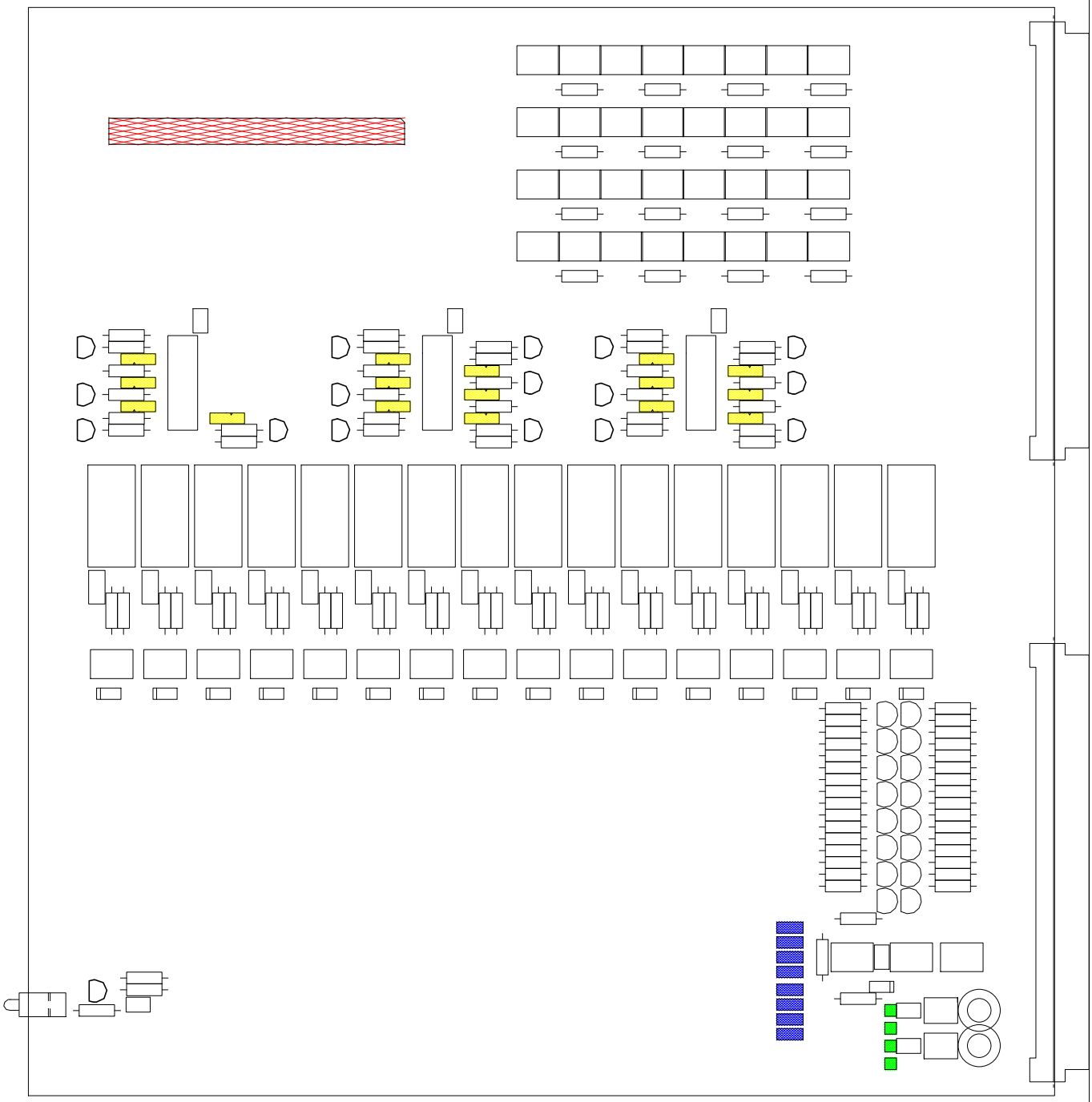

EP 680-1149-750-B

Digital Input Module

Nom du client:	Olesen G.	**Numéro de code budget:**	33170
DATE:	1/29/2002 12:12		
Dessinateur:	Franck EUDARIC	**Liste crée par:**	Franck Eudaric

Materiel du Module

Materiel monté sur le circuit

QTY	SCEM/NAME	Description	Value	Outline	Volt./ w.	Tol.	Parts
		Standard Magasin (SCEM)					
2	06.73.03.500.8	Vertical fuse holder for PCB	FUSE HOLDER				F1-F2
1	07.88.10.670.3	3MM Single Green LED with Resistor	26.05.1.0.1.1		GREEN		LD1
1	08.51.11.100.3	Small Signal Switching Diode	1N4448	DO35			D1
17	08.53.31.640.8	Low Power SI-NPN Transistor	2N3904	TO92			T1-T10,T100,T11-T16
3	08.56.93.014.2	HEX.SCHMITT.TRIGGER.INVERTERS Mounted on DIP Socket Scem: **08.61.20.551.2**	74F14N	DIP14_3			IC1-IC3
1	09.55.05.150.0	2x25 Solder Tail Headers without Locking Clips	38903581-50400				J6
2	09.61.33.315.7	Right Angle 3x32pins Male connector for PCB	0903.196.2921				J1-J2
7	10.11.01.360.3	Ceramic Capacitor	100nF		50V		C1-C3,C6-C9
16	10.35.07.422.4	Polyester Capacitor 2Steps	220nF		100V		C10,C20,C30,C40,C50,C60,C70,C80,C90,C100,C110,C120,C130,C140,C150,C160
2	10.35.07.500.7	Polyester Capacitor 2Steps	1uF		100V		C4-C5
16	10.36.06.230.8	MKL Metalized Plastic Capacitor	4.7uF	36062308	250V		C11,C21,C31,C41,C51,C61,C71,C81,C91,C101,C111,C121,C131,C141,C151,C161
16	11.22.10.324.5	High Stability Metal Film Resistor	240	R04WHS	0.4W	1%	R16,R26,R36,R46,R56,R66,R76,R86,R96,R106,R116,R126,R136,R146,R156,R166
1	11.22.10.327.2	High Stability Metal Film Resistor	270	R04WHS	0.4W	1%	R4
1	11.22.10.347.8	High Stability Metal Film Resistor	470		0.4W	1%	R6
34	11.22.10.368.3	High Stability Metal Film Resistor	680	R04WHS	0.4W	1%	R2-R3,R13-R14,R23-R24,R33-R34,R43-R44,R53-R54,R63-R64,R73-R74,R83-R84,R93-R94,R103-R104,R113-R114,R123-R124,R133-R134,R143-R144,R153-R154,R163-R164

EP 680-1149-750-B

Digital Input Module

Nom du client:	Olesen G.	**Numéro de code budget:**	33170
DATE:	1/29/2002 12:12		
Dessinateur:	Franck EUDARIC	**Liste crée par:**	Franck Eudaric

Materiel du Module

Materiel monté sur le circuit

QTY	SCEM/NAME	Description	Value	Outline	Volt./ w.	Tol.	Parts
32	11.22.10.382.5	High Stability Metal Film Resistor	820	R04WHS	0.4W	1%	R10-R11,R20-R21,R30-R31,R40-R41,R50-R51,R60-R61,R70-R71,R80-R81,R90-R91,R100-R101,R110-R111,R120-R121,R130-R131,R140-R141,R150-R151,R160-R161
1	11.22.10.415.3	High Stability Metal Film Resistor	1.5K		0.4W	1%	R1
1	11.22.10.439.5	High Stability Metal Film Resistor	3.9K		0.4W	1%	R5
32	11.22.10.510.5	High Stability Metal Film Resistor	10K		0.4W	1%	R12,R15,R22,R25,R32,R35,R42,R45,R52,R55
		Non Standard Magasin					
51	08.SFH601	NPN-Output dc-Input Optocoupler Mounted on DIP Socket Scem: **08.61.20.510.1**	SFH601-1	DIP6			IC7-IC12,IC20-IC22,IC30-IC32,IC40-IC42,IC50-IC52,IC60-IC62,IC70-IC72,IC80-IC82,IC90-IC92,IC100-IC102,IC110-IC112,IC120-IC122,IC130-IC132,IC140-IC142,IC150,IC160-IC162,IC1551-IC1552
16	J510	Current Regulator Diode	J510	TO226AA	3.6mA		D10,D20,D30,D40,D50,D60,D70,D80,D90,D100,D110,D120,D130,D140,D150,D160
16	08.51.11.1N4148	Switching Rectifier Diode	1N4148	DO35			D11,D21,D31,D41,D51,D61,D71,D81,D91,D101,D111,D121,D131,D141,D151,D161
4	TP	Stand-Alone Pin for probe test pin	TP		Not Mounted		TP2-TP5
16	07.88.24-JUMPINV	Address Selection Jumper 2Pos. (mounted on SCEM 09.55.10.708.9)	STRAP3				ST1-ST16
8	07.88.24-VKDEG	Address Selection Jumper mounted on SCEM 09.55.10.708.9	JUMPER	STRAP			ST17-ST23,ST100

Board Dimensions: 200x233.4mm	through pins: 1105 SMD pins on TOP: 0 SMD pins on BOTTOM: 0 Total nb of pins: 1105